Washoe County Development Application

Your entire application is a public record. If you have a concern about releasing personal information, please contact Planning and Building staff at 775.328.6100.

Project Information	**Staff Assigned Case No.:** _____
Project Name: 250 Hirsh Rd	
Project Description: Conversion of existing pool house into guest house	
Project Address: 250 Hirsh Rd., Reno NV 89523	
Project Area (acres or square feet):	
Project Location (with point of reference to major cross streets **AND** area locator): 250 Hirsh Rd, Reno, NV 89523. Verdi on the river	

Assessor's Parcel No.(s):	Parcel Acreage:	Assessor's Parcel No.(s):	Parcel Acreage:
038-242-34	5 acres		

Indicate any previous Washoe County approvals associated with this application:
Case No.(s).

Applicant Information (attach additional sheets if necessary)

Property Owner:		**Professional Consultant:**	
Name: Mike Gerutto		Name: David Madsen - KRI Architecture + Design	
Address: 250 Hirsh Rd, Reno NV 89523		Address: 321 E. 5th St.	
	Zip:		Zip:
Phone: 1-562-896-9097	Fax:	Phone:	Fax:
Email: mike@cipexinternational..com		Email: kriarchitecture@gmail.com	
Cell:	Other:	Cell: 775-240-1341	Other:
Contact Person:		Contact Person: David Madsen	
Applicant/Developer:		**Other Persons to be Contacted:**	
Name: Mike Gerutto		Name:	
Address: 250 Hirsh Rd, Reno NV 89523		Address:	
	Zip:		Zip:
Phone: 1-562-896-9097	Fax:	Phone:	Fax:
Email: mike@cipexinternational..com		Email:	
Cell: 1-562-896-9097	Other:	Cell:	Other:
Contact Person: Mike Gerutto		Contact Person:	

For Office Use Only

Date Received:	Initial:	Planning Area:
County Commission District:		Master Plan Designation(s):
CAB(s):		Regulatory Zoning(s):

Property Owner Affidavit

Applicant Name: MIKE GERUTTO

The receipt of this application at the time of submittal does not guarantee the application complies with all requirements of the Washoe County Development Code, the Washoe County Master Plan or the applicable area plan, the applicable regulatory zoning, or that the application is deemed complete and will be processed.

STATE OF NEVADA)
)
COUNTY OF WASHOE)

I, MIKE GERUTTO,
(please print name)

being duly sworn, depose and say that I am the owner* of the property or properties involved in this application as listed below and that the foregoing statements and answers herein contained and the information herewith submitted are in all respects complete, true, and correct to the best of my knowledge and belief. I understand that no assurance or guarantee can be given by members of Planning and Building.

(A separate Affidavit must be provided by each property owner named in the title report.)

Assessor Parcel Number(s): 038-242-34

Printed Name MIKE GERUTTO

Signed [signature]

Address 250 HIRSH RD.

VERDI, NV. 89439

Subscribed and sworn to before me this 7th day of July, 2021.

[signature]

Notary Public in and for said county and state

My commission expires: August 11, 2022

(Notary Stamp)

DON JOSEPH SANTIAGO
Notary Public, State of Nevada
Appointment No. 18-3231-2
My Appt. Expires Aug 11, 2022

*Owner refers to the following: (Please mark appropriate box.)

- ■ Owner
- ☐ Corporate Officer/Partner (Provide copy of record document indicating authority to sign.)
- ☐ Power of Attorney (Provide copy of Power of Attorney.)
- ☐ Owner Agent (Provide notarized letter from property owner giving legal authority to agent.)
- ☐ Property Agent (Provide copy of record document indicating authority to sign.)
- ☐ Letter from Government Agency with Stewardship

Administrative Review Permit Application for a Detached Accessory Dwelling Supplemental Information

(All required information may be separately attached)

1. What is the size (square footage) of the main dwelling or proposed main dwelling (exclude size of garage)?

5,697 sf

2. What is the size of the proposed detached accessory dwelling (exclude size of garage)? If a manufactured or modular home is the secondary dwelling, list the age and size of the unit.

1,234 sf

3. How are you planning to integrate the main dwelling and secondary dwelling to provide architectural compatibility of the two structures?

The guest house is an existing structure that has the same architectural character of the existing main house.

5. How many off-street parking spaces are available? Parking spaces must be shown on site plan. Are any new roadway, driveway, or access improvements be required?

All is existing. 5 acre site, lots of parking. Minimum of 10 spaces available.

6. What will you do to minimize any potential negative impacts (e.g. increased lighting, removal of existing vegetation, etc.) your project may have on adjacent properties?

Building is existing, and being converted from a pool house to a guest house. No impact will occur.

7. Is the subject property part of an active Home Owners Association (HOA) or Architectural Control Committee?

❑ Yes	■ No	If yes, please list the HOA name.

8. Are there any restrictive covenants, recorded conditions, or deed restrictions (CC&Rs) that may prohibit a detached accessory dwelling on your property?

❑ Yes	■ No	If yes, please attach a copy.

9. Only one accessory dwelling unit, whether attached or detached, is allowed per parcel. Is there a guest apartment, mother-in-law unit, next-gen addition with kitchen or any other type of secondary dwelling on the subject property?

❑ Yes	■ No	If yes, please provide information on the secondary unit.

10. List who the service providers are for the main dwelling and accessory dwelling:

	Main Dwelling	Accessory Dwelling
Sewer Service	Septic System	Septic System
Electrical Service	NV Energy	NV Energy
Solid Waste Disposal Service	WM	WM
Water Service	Domestic Well	Domestic Well

250 HIRSH ROAD GUEST HOUSE / REMODEL

scope of work:
Remodel of existing pool house into a guest house.
Main house and barn are not a part of this permit.

KRI ARCHITECTURE + DESIGN
321 E. 5th St. | Reno, Nevada 89501
www.kriarchitecture.com

[client]
MIKE & TERESA GERUTTO

[project]
038-242-34

GERUTTO GUEST HOUSE REMODEL
250 HIRSH ROAD
RENO, NV 89523

[consultant]

[project number]
20-65

[status]
CONSTRUCTION DOCUMENTS

NO.	DATE	DESCRIPTION

[license/ stamp]

2-16-21

4-19-21

[sheet title]
COVER SHEET

[sheet no. sheet]
A0.0

Any or all AIA C.E.D. 700 (E) v.1 Drawings and Specifications are instruments of service for this Project are the sole property of KRI Architecture & Design, LLC. They shall be used only as it respects to this specific Project. Any use or reproduction of this Drawing in whole or part by any means whatsoever is strictly prohibited, except with the specific written consent of KRI Architecture & Design, LLC.

1 Architectural Materials and Graphic Symbols

Not to Scale

MATERIALS

ASPHALT	ORIENTED STRAND BOARD
BATT INSULATION	PLYWOOD SHEATHING
BRICK	RIGID INSULATION
CMU BLOCK	SAND / MORTER / PLASTER
CONCRETE	STEEL
E.I.F.S./ STUCCO	STONE
GLASS	TECTUM
GRADE / EARTH	WOOD FINISH
GRAVEL	WALL THICKNESS
GYPSUM BOARD	WOOD STUD
GYPSUM SHEATHING	WOOD BLOCKING

SHEET SYMBOLS & NOTATIONS

NORTH ARROW	BUILDING SECTION CUT (DETAIL NUMBER, SHEET NUMBER)
GRID	WALL SECTION (DETAIL NUMBER, SHEET NUMBER)
REVISION CLOUD & NUMBER	DETAIL (DETAIL NUMBER, SHEET NUMBER)
ROOM NAME & NUMBER	ELEVATION (ELEVATION NUMBER, SHEET NUMBER)
DOOR SYMBOL (DOOR TYPE COUNT, DOOR TYPE)	WINDOW SYMBOL - PLAN SHEETS (WINDOW TYPE COUNT, WINDOW TYPE)
CEILING HIEGHT	WINDOW SYMBOL - ELEVATION SHEETS (WINDOW TYPE COUNT, WINDOW TYPE)
ACCESSORY SYMBOL	
ROOF SLOPE	PROPERTY CORNER
ROOF SLOPE PLAN	SPOT ELEVATION
CHANGE IN FLOOR MATERIAL	LEVEL ELEVATION

SITE & PROPERTY NOTATION

PROPOSED CONTOUR LINE	ELECTRICAL LINE
EXISTING CONTOUR LINE	FENCE LINE
DIRECTION OF DRAINAGE	SANITARY SEWER
PROPERTY LINE	STORM DRAIN
MATCH LINE (SHEET ON WHICH DRAWN)	PHONE LINE
CENTERLINE	TELEVISION LINE
	WATER LINE
	GAS LINE

4 General Notes

1. THESE GENERAL NOTES PERTAIN TO WORK DESCRIBED ON ALL CONTRACT DOCUMENTS.
2. THE CONTRACT DOCUMENTS CONSIST OF THE OWNER CONTRACTOR AGREEMENT, THE CONDITIONS OF CONTRACT (GENERAL, SUPPLEMENTARY, AND OTHER CONDITIONS), THE DRAWINGS, THE SPECIFICATIONS, AND ALL ADDENDA ISSUED PRIOR TO AND ALL MODIFICATIONS ISSUED AFTER EXECUTION OF THE CONTRACT.
3. KRI ARCHITECTURE & DESIGN IS THE AUTHOR OF THESE PLANS AND CLAIMS A COPYRIGHT IN THESE PLANS AND THE DESIGNS CONTAINED IN THESE PLANS. THIS CLAIM IS MADE UNDER TITLE 17 OF THE UNITED STATES CODE AND ALL APPLICABLE TREATIES AND FOREIGN LAWS. THESE COPYRIGHTED DRAWING FILES ARE TO BE USED FOR REFERENCE ONLY. KRI ARCHITECTURE & DESIGN WILL TAKE NO RESPONSIBILITY FOR ANY CHANGES MADE TO THESE DOCUMENTS BY ANOTHER PARTY AND NO LICENSE IS GIVEN FOR TRANSFER OF THESE COPYRIGHTS TO ANOTHER PARTY.
4. THE WORK COMPRISES THE COMPLETED CONSTRUCTION REQUIRED BY THE CONTRACT DOCUMENTS AND INCLUDES ALL LABOR NECESSARY TO PRODUCE SUCH CONSTRUCTION, AND ALL MATERIALS AND EQUIPMENT INCORPORATED OR TO BE INCORPORATED IN SUCH CONSTRUCTION.
5. SHOP DRAWINGS, PRODUCT DATA AND SAMPLES ARE NOT A PART OF THE CONTRACT DOCUMENTS. THE ARCHITECT WILL REVIEW THEM, BUT ONLY FOR CONFORMANCE WITH THE DESIGN CONCEPT OF THE WORK AND WITH THE INFORMATION GIVEN IN THE CONTRACT DOCUMENTS. THE CONTRACTOR SHALL NOT BE RELIEVED OF RESPONSIBILITY FOR ANY DEVIATION FROM THE REQUIREMENTS OF THE CONTRACT DOCUMENTS BY THE ARCHITECTS REVIEW OF SHOP DRAWINGS, PRODUCT DATA OR SAMPLES.
6. THE CONTRACTOR SHALL CAREFULLY STUDY AND COMPARE THE CONTRACT DOCUMENTS AND SHALL AT ONCE REPORT TO THE ARCHITECT ANY ERROR, INCONSISTENCY OR OMISSIONS HE MAY DISCOVER. THE CONTRACTOR SHALL PERFORM NO PORTION OF THE WORK AT ANY TIME WITHOUT CONTRACT DOCUMENTS OR, WHERE REQUIRED, APPROVED SHOP DRAWINGS, PRODUCT DATA OR SAMPLES FOR SUCH PORTION OF THE WORK.
7. ALL WORK IS TO CONFORM WITH THE CONTRACT DOCUMENTS. DRAWINGS ARE NOT TO BE SCALED FOR INFORMATION IF UNABLE TO LOCATE DIMENSIONS FOR ANY ITEM OF WORK, CONSULT WITH THE ARCHITECT BEFORE PROCEEDING WITH CONSTRUCTION.
8. IN THE EVENT CERTAIN FEATURES OF THE CONSTRUCTION ARE NOT FULLY SHOWN ON THE CONTRACT DOCUMENTS, THEN THEIR CONSTRUCTION SHALL BE OF THE SAME CHARACTER AS FOR SIMILAR CONDITIONS THAT ARE SHOWN OR CALLED FOR AND SHALL BE REVIEWED BY THE ARCHITECT.
9. ALL WORK SHALL BE PERFORMED WITHIN STRICT CONFORMANCE TO THE MINIMUM STANDARDS OF THE CURRENT EDITION OF THE INTERNATIONAL BUILDING CODE AND ALL APPLICABLE NATIONAL, STATE, AND LOCAL LAWS, REGULATIONS AND ORDINANCES.
10. THE CONTRACTOR SHALL BE RESPONSIBLE FOR THE GENERAL SAFETY DURING CONSTRUCTION, AND ALL WORK SHALL CONFORM TO PERTINENT SAFETY REGULATIONS.
11. THE CONTRACTOR SHALL COORDINATE LOCATIONS OF ANY AND ALL MECHANICAL, TELEPHONE, ELECTRICAL, LIGHTING AND PLUMBING INCLUDING ALL PIPING, DUCT WORK AND CONDUIT. COORDINATE ALL REQUIRED CLEARANCES FOR INSTALLATION AND MAINTENANCE OF THE ABOVE EQUIPMENT.
12. THE CONTRACTOR SHALL SUPERVISE AND DIRECT THE WORK USING HIS/HER BEST SKILL AND ATTENTION, HE/SHE SHALL BE SOLELY RESPONSIBLE FOR ALL CONSTRUCTION MEANS, METHODS, TECHNIQUES, SEQUENCES AND PROCEDURES AND FOR COORDINATING ALL PORTIONS OF THE WORK UNDER THE CONTRACT.
13. THE CONTRACTOR SHALL BE RESPONSIBLE FOR THE ACTS AND OMISSIONS OF HIS/HER EMPLOYEES, SUBCONTRACTORS AND THEIR AGENTS AND EMPLOYEES, AND OTHER PERSONS PERFORMING ANY WORK UNDER A CONTRACT WITH THE CONTRACTOR.
14. THE CONTRACTOR SHALL PURSUE WORK IN A CONTINUOUS AND DILIGENT MANNER TO INSURE TIMELY COMPLETION OF THE PROJECT.
15. THE CONTRACTOR AT ALL TIMES SHALL KEEP THE PREMISES FREE FROM ACCUMULATION OF WASTE MATERIALS OR RUBBISH CAUSED BY HIS/HER OPERATIONS. AT THE COMPLETION OF THE WORK, HE/SHE SHALL REMOVE ALL HIS/HER WASTE MATERIALS AND RUBBISH FROM AND ABOUT THE PROJECT AS WELL AS ALL HIS/HER TOOLS, CONSTRUCTION EQUIPMENT, MACHINERY, AND SURPLUS MATERIALS.
16. THE CONTRACTOR SHALL BE RESPONSIBLE FOR THE LOCATION AND/OR PROTECTION OF ALL EXISTING AND PROPOSED PIPING, UTILITIES, STRUCTURES, ADJACENT STREETS, AND IMPROVEMENTS DURING THE PERIOD OF CONSTRUCTION.
17. UNLESS OTHERWISE PROVIDED IN THE CONTRACT DOCUMENTS, THE CONTRACTOR SHALL PROVIDE AND PAY FOR ALL LABOR, MATERIAL, EQUIPMENT, TOOLS, CONSTRUCTION EQUIPMENT, MACHINERY, WATER, HEAT, UTILITIES, TRANSPORTATION, AND OTHER FACILITIES AND SERVICES NECESSARY FOR THE PROPER EXECUTION AND COMPLETION OF THE WORK.
18. THE CONTRACTOR SHALL SUBMIT WEEKLY JOB STATUS REPORTS TO THE ARCHITECT. THE REPORT SHALL STATE ACTUAL PROGRESS OF THE JOB AND LIST ANY CHANGES OR CONDITIONS WITHIN THE SCOPE OF THE CONTRACT DOCUMENTS AFFECTING THE JOB PROGRESS.
19. WHERE CONFLICTS OCCUR, COORDINATE THE LAYOUT AND EXACT LOCATION OF ALL PARTITIONS, DOORS, TELEPHONES AND ELECTRICAL/COMMUNICATION OUTLETS AND SWITCHES WITH ARCHITECT IN THE FIELD BEFORE PROCEEDING WITH CONSTRUCTION.
20. WHERE CONFLICT IS ENCOUNTERED BETWEEN THE CONTRACT DOCUMENTS THAT WILL MATERIALLY AFFECT THE QUALITY OR EXTENT OF THE WORK, SUCH CONFLICT SHALL BE RESOLVED TO THE SATISFACTION OF THE ARCHITECT BEFORE THE AFFECTED ITEMS AND/OR MATERIALS ARE PURCHASED, FABRICATED AND/OR INSTALLED.
21. WHERE PRE MANUFACTURED OR PREFABRICATED ITEMS AND/OR MATERIALS ARE TO BE INSTALLED - THE CONTRACTOR SHALL VERIFY ROUGH OR FINISHED DIMENSIONS IN THE FIELD PRIOR TO PURCHASE OR FABRICATION.
22. THE CONTRACTOR SHALL GUARANTEE ALL WORK AND MATERIALS TO BE FREE FROM DEFECTS FOR A MINIMUM OF ONE YEAR FROM DATE OF FINAL ACCEPTANCE, AND PROMPTLY REMEDY SUCH DEFECTS AND ANY SUBSEQUENT DAMAGE CAUSED BY THE DEFECTS OR REPAIR THEREOF, AT NO EXPENSE TO THE OWNER. GUARANTEE PERIODS OF GREATER THAN ONE YEAR MAY BE REQUIRED AND CONTAINED WITHIN THE CONTRACT DOCUMENTS.

5 Construction Notes

1. **GENERAL:**
   A. ALL DIMENSIONS ARE TO BE FIELD VERIFIED. ANY DISCREPANCIES ARE TO BE BROUGHT TO THE ATTENTION OF THE ARCHITECT.
   B. ALL DIMENSIONS ARE TO FACE OF STUD OR STRUCTURE UNLESS NOTED OTHERWISE.
   C. PROVIDE SOLID 2x BLOCKING BEHIND ALL WALL MOUNTED ACCESSORIES AND FIXTURES.
   D. ALL CABINET WORK TO BE DESIGNED BY CABINET MANUFACTURER. SHOP DRAWINGS SHALL BE SUBMITTED TO ARCHITECT FOR APPROVAL PRIOR TO FABRICATION AND INSTALLATION.
   E. CABINET MANUFACTURER SHALL TAKE ON-SITE MEASUREMENTS PRIOR TO FABRICATION TO INSURE PROPER SIZE AND ACCURACY.
   F. VENT DRYER TO EXTERIOR. VENT DUCT SHALL BE 4" IN DIAMETER AND NOT EXCEED 14FT. IN LENGTH.
   H. PROVIDE 5/8" TYPE 'X' GYPSUM BOARD AT THE UNDER SIDE OF ALL STAIRS.
   I. STAIRS SHALL HAVE 8" MAX. RISERS AND 11" MIN. TREADS.
   J. PROVIDE 18"X24" MINIMUM UNDER-FLOOR ACCESS AS INDICATED ON PLAN.
   K. PROVIDE 22"X30" MINIMUM ATTIC ACCESS AS INDICATED ON PLAN.
   L. PROVIDE MINIMUM 10 MIL. OF VAPOR BARRIER AT ALL UNDER-FLOOR AREAS.
   M. ALL STEMWALLS TO RECEIVE WATER PROOF MEMBRANE OR COATING.
   N. ALL SILLS TO BE PRESSURE TREATED (P.T.)

1 Owner & Property Information

Mike & Teresa Gerutto
250 Hirsh Road
Reno, NV 89523

1-562-896-9097
mike@cipexinternational.com

2 Code Study & Map

LOCATION	APN: 038-242-34
ZONING:	LDS
OCCUPANCY GROUP:	R
CONSTRUCTION TYPE:	V-B
TOTAL SF:	1,234 SF
HEIGHT:	30'
STORIES:	1

DEFERRED SUBMITTALS:
-

APPLICABLE BUILDING CODES:
IRC 2018
WUI 2018

3 Sheet Index & Project Team

Civil

C1	SEPTIC PLANS	NORTECH 8620 TECHNOLOGY WAY RENO, NV	Remington Walker 300 Western Road #3 Reno, NV 89506

Architectural

A0.1	TITLE SHEET	KRI Architecture & Design 321 E. 5th St. Reno, NV 89501	David Michael Madsen (775) 240.1341 kristophari@gmail.com
A1.0	SITE PLAN		
A2.1	GUEST HOUSE - DEMO		
A2.2	GUEST HOUSE - PROPOSED		
A2.3	GUEST HOUSE ROOF PLAN		
A3.1	GUEST HOUSE ELEVATIONS		
A3.2	GUEST HOUSE ELEVATIONS		
A3.3	RENDERINGS - GUEST HOUSE		
A8.1	DOORS AND WINDOWS		

Structural

S1	GUEST HOUSE FOUND./ SHEAR/ FRAMING	RWENGINEERING 575 EAST PLUMB LANE, SUITE 101 RENO, NV 89502	Russell Wallace 775-393-9128 russ@rwengineering.net
SD-1	STRUCTURAL NOTES		
SD-2	STRUCTURAL DETAILS		
SD-3	STRUCTURAL DETAILS		

KRI ARCHITECTURE + DESIGN
321 E. 5th St. I Reno, Nevada 89501
www.kriarchitecture.com

[client]
MIKE & TERESA GERUTTO

[project]
038-242-34

GERUTTO GUEST HOUSE REMODEL

250 HIRSH ROAD
RENO, NV 89523

[consultant]

[project number]
20-65

[phase]
CONSTRUCTION DOCUMENTS

[revisions]

NO.	DATE	DESCRIPTION
1	Date 1	Revision 1

[license / stamp]
DAVID M. MADSEN REGISTERED ARCHITECT No 6788 STATE OF NEVADA
2-16-21

4-19-21

[sheet title]
TITLE SHEET

[sheet number]
A0.1

As per NAC 623.760(2), all Drawings and Specifications as instrument of service for this Project are the sole property of KRI Architecture & Design, LLC. They shall be used only with respect to this specific Project. Any use or reproduction of this Drawing in whole or part by any means whatsoever is strictly prohibited, except with the specific written consent of KRI Architecture & Design, LLC.

SITE PLAN
1" = 30'
Total Lot Area = 1.56 Acres

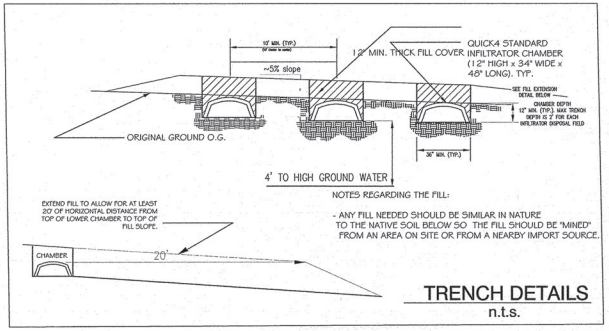

NOTES REGARDING THE FILL:

- ANY FILL NEEDED SHOULD BE SIMILAR IN NATURE TO THE NATIVE SOIL BELOW SO THE FILL SHOULD BE "MINED" FROM AN AREA ON SITE OR FROM A NEARBY IMPORT SOURCE.

TRENCH DETAILS
n.t.s.

DESIGN CALCULATIONS

NEW GUEST HOUSE: Up to 3 bedroom requires a 1000 gallon septic tank

SOIL TYPE: Light Silty Sand (SM)

DESIGN PERCOLATION RATE: 60 minutes per inch

LEACH FIELD TYPE: Chamber infiltration system

DESIGN: PER INFILTRATION SYSTEM, INC., SIZING CHART ADOPTED BY THE STATE OF NEVADA.

A. REQUIRED LENGTH OF STANDARD CHAMBER UNITS (PRIMARY FIELD)

Per Nevada State Health Division Chamber Leach Field Sizing Chart: Based on a Percolation Rate of 51 - 60 mpi for the sizing of a 1000 Gallon Septic Tank, Total minimum of 68 units (Quick 4 Standard Chamber) are required.

Each Unit is 4.00 LF. Therefore, the required length of the Chamber System is 4.00 LF x 68 = 272 LF. The total length is less than 500 LF so no dosing is required.

Design: Use 69 Chamber Units (need evenly divisible by 3)
3 Lines x 23 Units (92 LF per line) = 276 LF, 272 LF required, OK

B. REQUIRED LENGTH OF STANDARD CHAMBER UNITS (SECONDARY FIELD)

Design: Use Same as Primary Field

TEST PIT NO.:	1	SET UP:	4/19/21
TEST NO.:	A	RUN:	4/20/21
DIMENSIONS:	6" Wide X 12" Deep	TIME:	9:00 AM
SOIL TESTED:	Brown Silty Sand (SM)	FIELD TECH:	RJK

LOG

RELATIVE TIME (hours/minutes)	MEASURED DROP (inches)	REMARKS
0:00	0:00	Initial Water Added, IAW 090.060
0:00	0:00	Level Constant, Pre-soak completed, IAW 090.060
0:30	1/2	Proceed IAW 090.075
1:00	1/2	
1:30	1/2	Terminate, IAW 090.075

PERCOLATION RATE: 60 Minutes Per Inch
DEPTH TEST PERFORMED: 15 Feet
PIT EVALUATED BY: K. VESTRIE

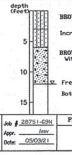

BROWN SILTY SAND (SM)
Increasing gravel content at 3'
BROWN SANDY GRAVEL (GP) With cobbles and boulders to 2' size
G.W.L. Free water encountered at 12'
Bottom of pit at 13' depth

TEST PIT LOCATION:
LATITUDE: 39.499298
LONGITUDE: -119.995748
Estimated Error: 5 to 6'
radius from old point

NORTECH GEOTECHNICAL/CIVIL CONSULTANTS, LTD.
Job # 28751-GPN
Appr. JMW
Date 05/03/21
PERCOLATION TEST RECORD
250 HIRSCH ROAD
APN: 038-242-34
WASHOE COUNTY, NEVADA
PLATE 1A

TEST PIT NO.:	1	SET UP:	4/19/21
TEST NO.:	B	RUN:	4/20/21
DIMENSIONS:	6" Wide X 12" Deep	TIME:	9:00 AM
SOIL TESTED:	Brown Silty Sand with Gravel (SM)	FIELD TECH:	RJK

LOG

RELATIVE TIME (hours/minutes)	MEASURED DROP (inches)	REMARKS
0:00	0:00	Initial Water Added, IAW 090.060
0:00	0:00	Level Constant, Pre-soak completed, IAW 090.060
0:30	3/4	Proceed IAW 090.075
1:00	11/16	
1:30	11/16	Terminate, IAW 090.075

PERCOLATION RATE: 43.6 Minutes Per Inch
DEPTH TEST PERFORMED: 15 Feet
PIT EVALUATED BY: K. VESTRIE

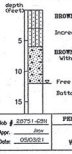

BROWN SILTY SAND (SM)
Increasing gravel content at 3'
BROWN SANDY GRAVEL (GP) With cobbles and boulders to 2' size
G.W.L. Free water encountered at 12'
Bottom of pit at 13' depth

TEST PIT LOCATION:
LATITUDE: 39.499298
LONGITUDE: -119.995748
Estimated Error: 5 to 6'
radius from old point

NORTECH GEOTECHNICAL/CIVIL CONSULTANTS, LTD.
Job # 28751-GPN
Appr. JMW
Date 05/03/21
PERCOLATION TEST RECORD
250 HIRSCH ROAD
APN: 038-242-34
WASHOE COUNTY, NEVADA
PLATE 1B

REVISIONS	BY

NORTECH
GEOTECHNICAL/CIVIL CONSULTANTS, LTD.
8820 TECHNOLOGY WAY, RENO, NEVADA • 775.852.7475 • FAX 775.852.7488

PROFESSIONAL ENGINEER - STATE OF NEVADA
CHARLES DESMONTON WALKER
Exp. 12/31/22
CIVIL
No. 027779

DESIGN PLAN AND DETAILS
ON-SITE SEWAGE DISPOSAL SYSTEM
250 HIRSH ROAD
A.P.N. 038-242-34
WASHOE COUNTY, NEVADA

DRAWN	NSV
CHECKED	NSV
DATE	5-14-21
SCALE	AS NOTED
JOB NO.	28751-GPN
SHEET	C1
OF	SHEETS

Site Notes

1. PROPERTY DESCRIPTION INFORMATION ON THIS SHEET FOR GENERAL USE, NOT A LEGAL SURVEY. REFER TO CIVIL OR SURVEYING FOR MORE INFORMATON.
2. CONNECT UTILITY EXTENSIONS TO EXISTING UTILITIES. CONTRACTOR TO VERIFY LOCATIONS.
3. PROVIDE MIN. 5% SLOPE DRAINAGE AWAY FROM PERIMETER OF BUILDING, 2% SLOPE FOR ALL CONCRETE.
4. COORDINATE ALL LIMITS OF CONSTRUCTION, STORAGE AREA, & VEGETATION W/OWNER OR ARCHITECT.
5. ALL EXISTING VEGATION AND TREES TO REMAIN U.N.O.

1 SITE
1" = 30'-0"

DENOTES DESIGN STANDARDS

TABLE 503.1 IGNITION-RESISTANT CONSTRUCTION						
DEFENSIBLE SPACE (Chapter 6)	Fire-Hazard Severity (Chapter 4)					
	Moderate Hazard		High Hazard		Extreme Hazard	
	Water Supply		Water Supply		Water Supply	
	Conforming	Nonconforming	Conforming	Nonconforming	Conforming	Nonconforming
Nonconforming	IR2	IR 1	IR1	IR 1 NC	IR 1 NC	Not Permitted
Conforming	IR3	IR 2	IR2	IR 1	IR 1	IR 1 NC
1.5 Conforming	Not Required	IR 3	IR3	IR 2	IR 2	IR 1

Note: IR 1 NC shall have exterior walls of 1 hour fire resistive construction and exterior siding material shall be noncombustible.

IGNITION-RESISTANT CONSTRUCTION

	Class 1 (IR1)	Class 2 (IR2)	Class 3 (IR3)
Roofs	•Class A - Roof edge/gaps fire stopped - 26 gage valley flashings	•Class B - Roof edge/gaps fire stopped - 26 gage valley flashings	•Class C - Roof edge/gaps fire stopped - 26 gage valley flashings
Eaves	•IR material •1-hour FRC •2" nom. dimension lumber •Or treated materials	•Enclosed with solid material (3/4" min.) •No exposed tails unless heavy timber	
Fascia	•IR material •1-hour FRC •2" nom. dimension lumber	•Enclosed with solid material (3/4" min.)	
Vents.c	•< 144 square inches •< 1/4 in. noncombustible corrosion-resistant mesh •Or approved devices	•< 144 square inches •< 1/4 in. noncombustible corrosion-resistant mesh •Or approved devices	Key IR = Ignition-Resistant FRC = Fire Resistant Rated Construction
Exteriors Walls	•Approved 1-hour FRCd •Approved noncombustible materials •Heavy timber or log wall •Fire retardant treated wood labeled for exterior use •IR material	•Approved 1-hour FRCd •Approved noncombustible materials •Heavy timber or log wall •Fire retardant treated wood labeled for exterior use •IR material	
Windows	•Tempered glass •Multilayered glazed panels •Glass block •Min. 20 minute rating	•Tempered glass •Multilayered glazed panels •Glass block •Min. 20 minute rating	
Doorse	•Approved noncombustible construction •Solid core (1 3/4" min.) •Min. 20 minute rating	•Approved noncombustible construction •Solid core (1 3/4" min.) •Min. 20 minute rating	
Appendages (i.e. Decks)f	•1-hour FRC •Heavy timber •Approved noncombustible materials •Fire retardant treated wood labeled for exterior use •IR material	•1-hour FRC •Heavy timber •Approved noncombustible materials •Fire retardant treated wood labeled for exterior use •IR material	
Unclosed Underfloor	•Enclosed to ground •1-hour FRC •Heavy timber •Fire retardant treated wood labeled for exterior use	•Enclosed to ground •1-hour FRC •Heavy timber •Fire retardant treated wood labeled for exterior use	•Enclosed to ground •1-hour FRC •Heavy timber
Gutters & Downspouts	•Noncombustible material •Prevent accumulation of leaves and debris	•Noncombustible material •Prevent accumulation of leaves and debris	•Noncombustible material •Prevent accumulation of leaves and debris

a. When provided.
b. Gable end, soffit, eave, and dormer vents shall be located at least 10 feet (3048 mm) from lot lines.
c. Attic ventilation openings at soffits, eaves, or overhang areas must be approved devices only.
d. On the exterior side.
e. Exception: Vehicle access door.
f. See WUI Code, amendments, and guide for additional restrictions or exceptions.

2 WUI Standards
12" = 1'-0"

KRI ARCHITECTURE + DESIGN
321 E. 5th St. | Reno, Nevada 89501
www.kriarchitecture.com

[client]
MIKE & TERESA GERUTTO

[project]
038-242-34

GERUTTO GUEST HOUSE REMODEL
250 HIRSH ROAD
RENO, NV 89523

[consultant]

[project number]
20-65

[status]
CONSTRUCTION DOCUMENTS

[revisions]		
NO.	DATE	DESCRIPTION
1	Date 1	Revision 1

[license/ stamp]
DAVID M. MADSEN REGISTERED No. 6766 ARCHITECT STATE OF NEVADA
4-19-21

4-19-21

[sheet title]
SITE PLAN

[sheet no.]
A1.0

Any and NAC 625.780 (2) and Drawings and Specifications are instruments of service for this Project and the sole property of KRI Architecture & Design, LLC. They shall be used only with respect to this specific Project. Any use or reproduction of this Drawing in whole or part by any means whatsoever is strictly prohibited, except with the specific written consent of KRI Architecture & Design, LLC.

Demo Notes

1. REMOVE ALL EXISTING CONSTRUCTION AS DESIGNATED ON DEMOLITION PLAN.
2. PERFORM ALL WORK WITH "DUE CARE AND DILIGENCE". PREVENT THE ARBITRARY DESTRUCTION OF ADJACENT CONSTRUCTION DESIGNATED TO REMAIN. TAKE CARE TO PREVENT THE INTERRUPTION OF CONCEALED UTILITIES WHICH ARE GOING TO REMAIN.
3. ANY UTILITIES DISCOVERED DURING THE DEMOLITION TO BE REPORTED TO THE ARCHITECT BEFORE REMOVAL OR DISCONNECTION.
4. PATCH EXISTING CONSTRUCTION TO REMAIN TO MATCH EXISTING ADJACENT CONSTRUCTION AND FINISHES UNLESS NOTED OTHERWISE.
5. ALL EQUIPMENT SUCH AS PLUMBING FIXTURES, ELECTRICAL FIXTURES AND EQUIPMENT, MECHANICAL EQUIPMENT, AIR CONDITIONING UNITS, ETC., TO BE REMOVED SHALL BE TURNED OVER TO THE OWNER OR STORED AS DIRECTED BY THE OWNER.

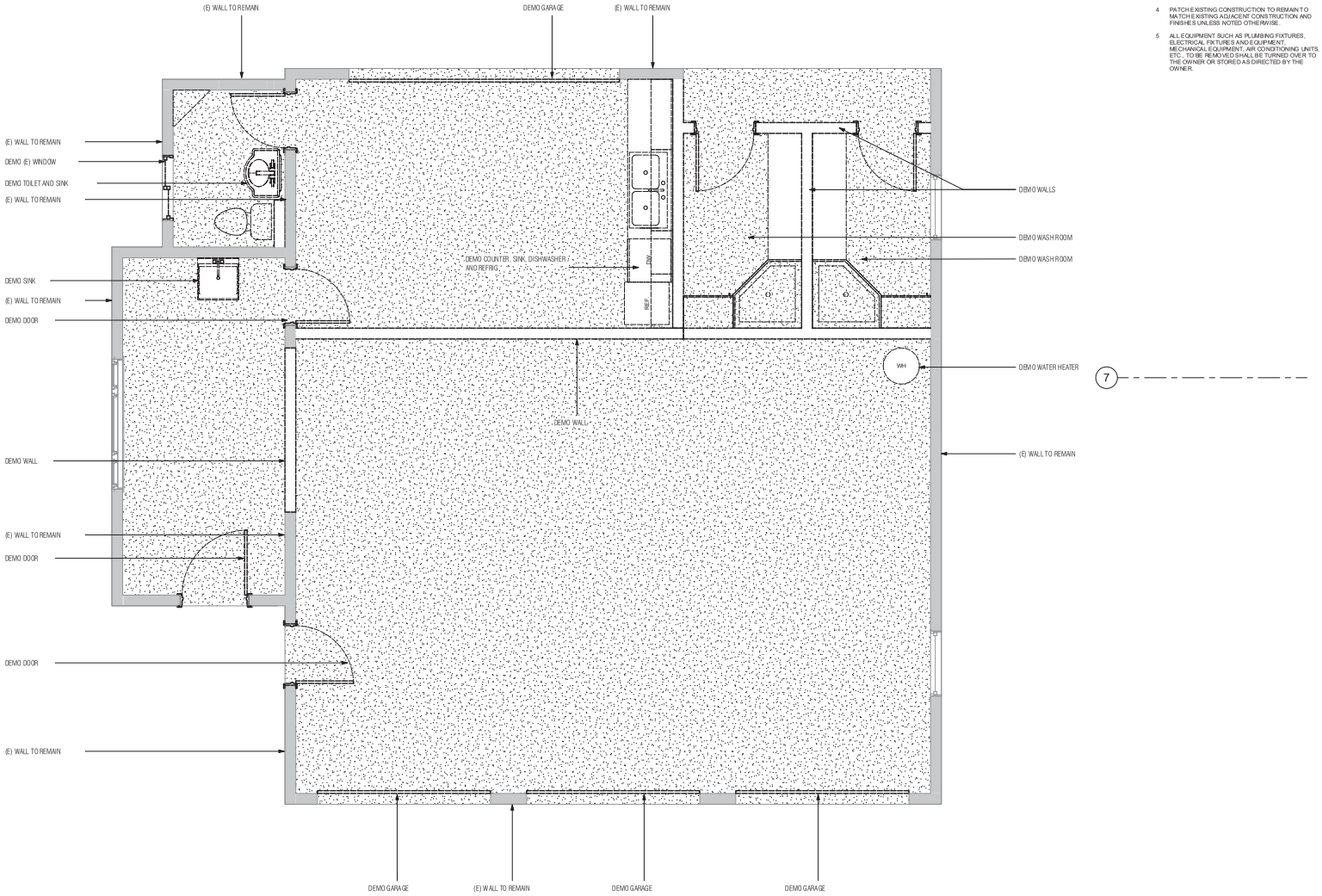

1 GUEST HOUSE PLAN - DEMO
1/2" = 1'-0"

KRI ARCHITECTURE + DESIGN

321 E. 5th St. | Reno, Nevada 89501
www.kriarchitecture.com

[client]
MIKE & TERESA GERUTTO

[project]
038-242-34

GERUTTO GUEST HOUSE REMODEL
250 HIRSH ROAD
RENO, NV 89523

[construction set]

[project number]
20-65

[status]
CONSTRUCTION DOCUMENTS

[revision]		
NO.	DATE	DESCRIPTION

[license / stamp]

DAVID M. MADSEN REGISTERED No. 6766 ARCHITECT STATE OF NEVADA

2-16-21

4-19-21

[sheet title]
GUEST HOUSE - DEMO

[sheet no.]
A2.1

Any and NAD C 8 25.780 (E) p.4 Dimensions and Specifications are intended for this Project are the sole property of KRI Architecture & Design, LLC. They shall be used only as it respect to this specific Project. Any use or reproduction of this Drawing in whole or part by any means without consent is strictly prohibited, except with the specific written consent of KRI Architecture & Design, LLC.

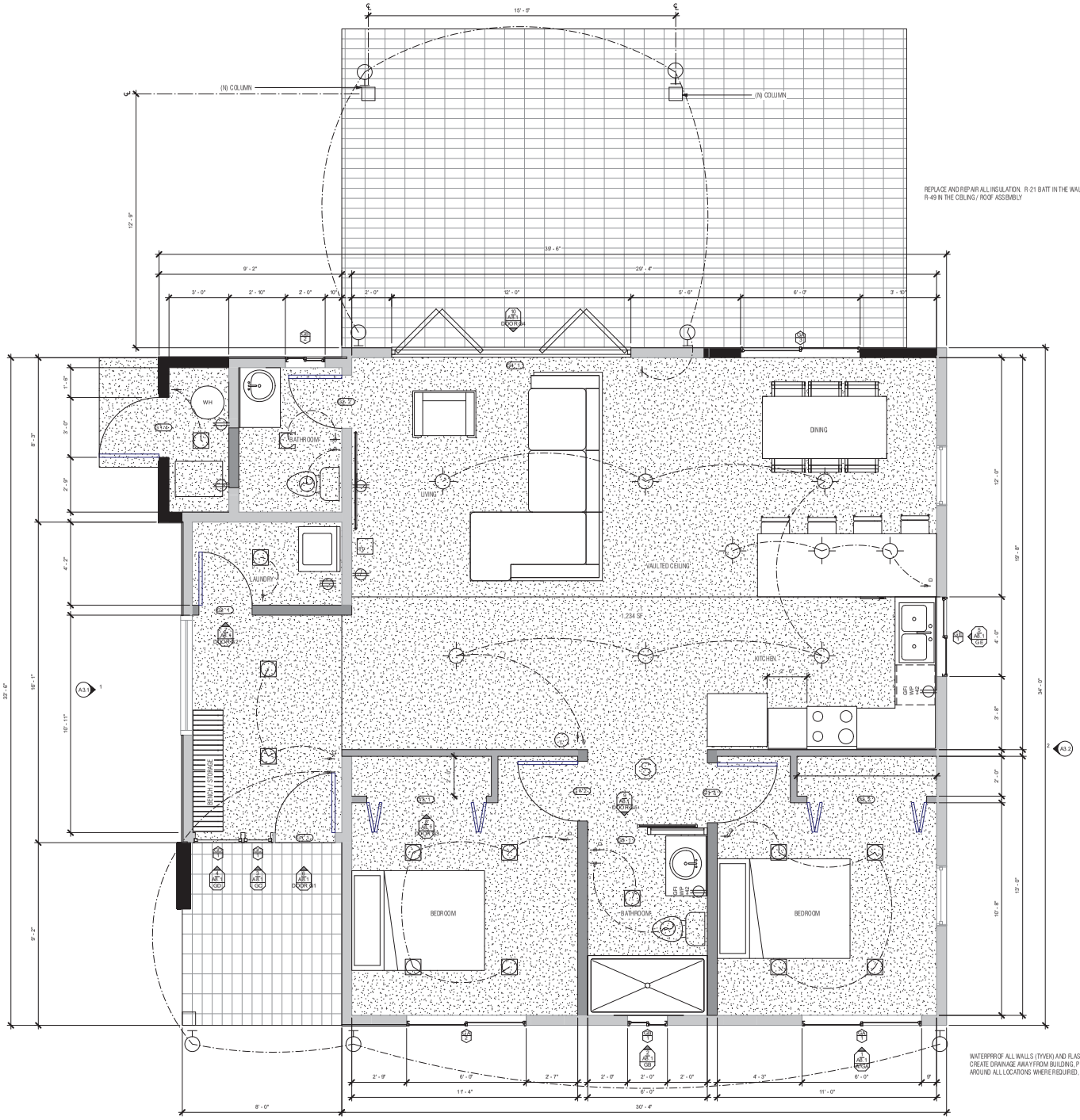

1 GUEST HOUSE PLAN - PROPOSED
1/2" = 1'-0"

EXISTING POOL HOUSE BEING CONVERTED INTO A GUEST HOUSE

Wall Types

- DEMOLISHED U.N.O.
- EXISTING TO REMAIN U.N.O.
- PROPOSED U.N.O.
- 4" INTERIOR STUDWALL U.N.O.
- NEW 4" INTERIOR STUDWALL U.N.O.
- 6" INTERIOR STUDWALL U.N.O.
- 6" EXTERIOR STUDWALL U.N.O.
- 8" CONCRETE WALL U.N.O.
- 8" CMU WALL U.N.O.

Electrical

- 110 V. DUPLEX OUTLET
- 220 V. APPLIANCE OUTLET
- 110 V. FLOOR OUTLET
- GFI — 110 V. GROUND FAULT INTERRUPTER PROTECTED DUPLEX OUTLET
- GFI WP — 110 V. GROUND FAULT INTERRUPTER PROTECTED DUPLEX OUTLET W/WATER PROOF OUTLET
- SINGLE POLE SWITCH
- 3 — THREE - WAY SWITCH
- D — DIMMER SWITCH
- LIGHT FIXTURE - BW OWNER
- RECESSED INCANDESCENT CAN LIGHT FIXTURE
- WALL MOUNTED LIGHT FIXTURE
- LIGHT FIXTURE - BY OWNER
- CEILING MOUNTED EXHAUST FAN
- G — GARAGE DOOR OPENER
- T — THERMOSTAT
- S — SMOKE DETECTOR
- PHONE JACK
- TV — TELEVISION CABLE OUTLET
- SINGLE TUBE FLOURESCENT MOUNTED UNDER CABINET
- CEILING FAN WITH INCANDESCENT LIGHT FIXTURE

ALL ELECTRICAL TO REMAIN THE SAME, UNLESS NOTED

KRI ARCHITECTURE + DESIGN
321 E. 5th St. | Reno, Nevada 89501
www.kriarchitecture.com

[client]
MIKE & TERESA GERUTTO

[project]
038-242-34

GERUTTO GUEST HOUSE REMODEL
250 HIRSH ROAD
RENO, NV 89523

[consultant]

[project number]
20-65

[status]
CONSTRUCTION DOCUMENTS

[revision]		
NO.	DATE	DESCRIPTION

[license / stamp]

DAVID M. MADSEN REGISTERED No. 6706 ARCHITECT STATE OF NEVADA

2-16-21

4-19-21

[drawing title]
GUEST HOUSE - PROPOSED

[drawing number]
A2.2

Any and/or AIA C.E.Z.S. 780 (E) p.4 Drawings and Specifications are instruments of service for this Project are the sole property of KRI Architecture & Design, LLC. They shall be used only and in respect to this specific Project at. Any use or reproduction of this Drawing in whole or part by any means without consent is strictly prohibited, except with the specific written consent of KRI Architecture & Design, LLC.

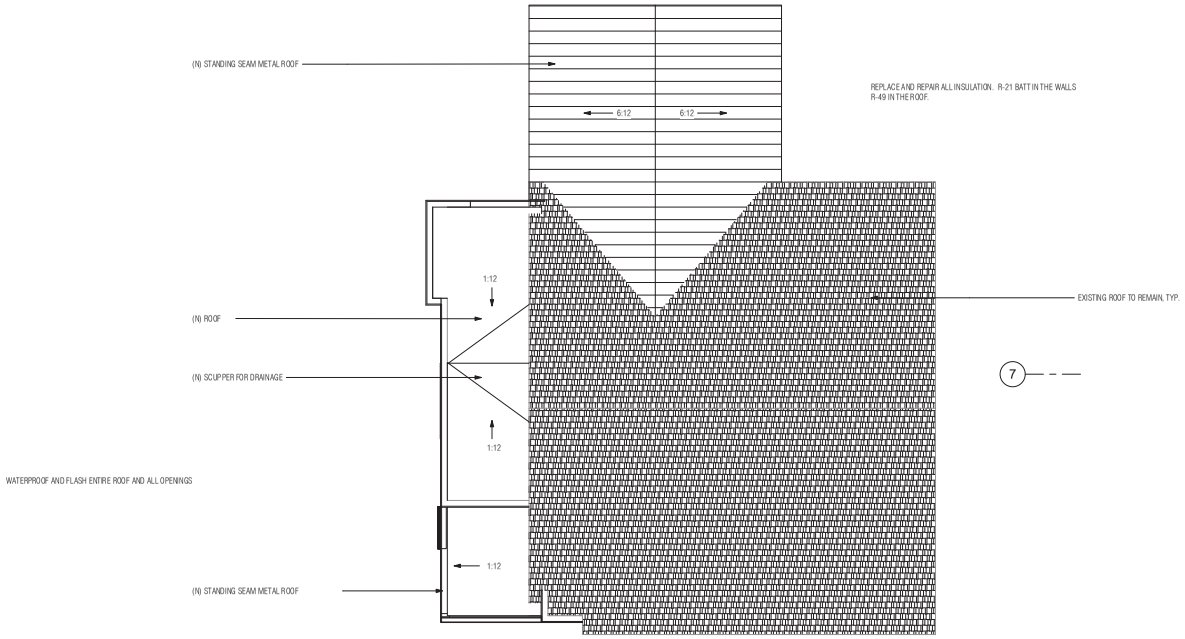

1 GUEST HOUSE ROOF PLAN
1/4" = 1'-0"

KRI ARCHITECTURE + DESIGN
321 E. 5th St. | Reno, Nevada 89501
www.kriarchitecture.com

[client]
MIKE & TERESA GERUTTO

[project]
038-242-34

GERUTTO GUEST HOUSE REMODEL
250 HIRSH ROAD
RENO, NV 89523

[issue/submit]

[project number]
20-65

[status]
CONSTRUCTION DOCUMENTS

NO.	DATE	DESCRIPTION

[license/stamp]

DAVID M. MADSEN
REGISTERED
No. 6766
ARCHITECT
STATE OF NEVADA

2-16-21

4-19-21

[sheet title]
GUEST HOUSE ROOF PLAN

[sheet no.]
A2.3

Any and AIA C.E.D. 700 (E) v.1 Drawings and Specifications are instruments of service for this Project are the sole property of KRI Architecture & Design, LLC. They shall be used only as intended for this specific Project. Any use or reproduction of this Drawing in whole or part by any means without consent is strictly prohibited, except with the specific written consent of KRI Architecture & Design, LLC.

WATERPROOF ALL SIDING AND ROOFING. TYVBK OR APPROVED EQUAL. FLASH ALL OPENINGS. TYP.

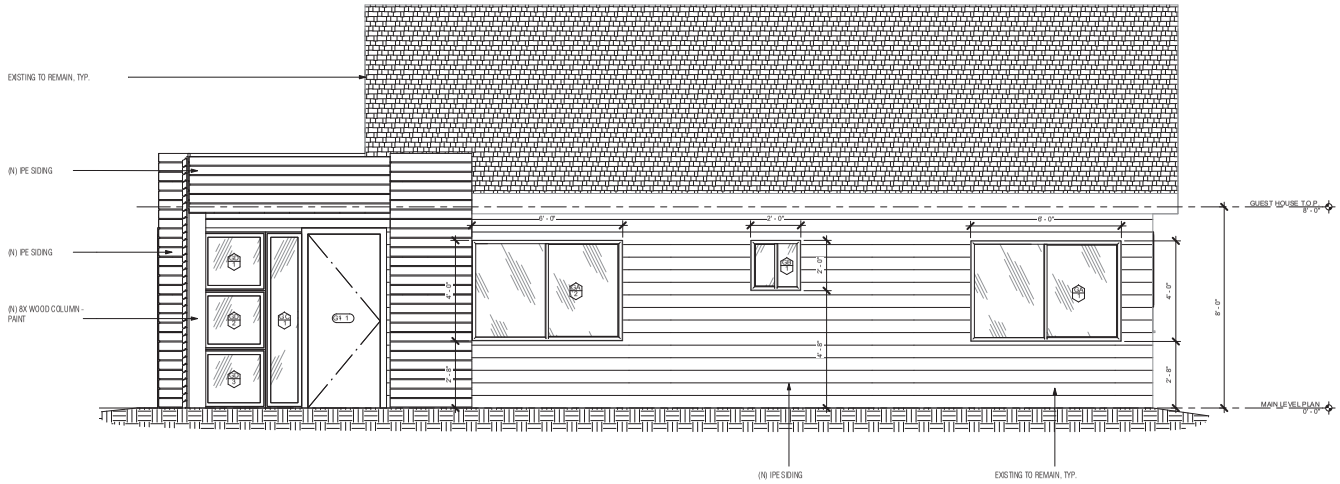

2 GUEST HOUSE WEST ELEVATION

1/2" = 1'-0"

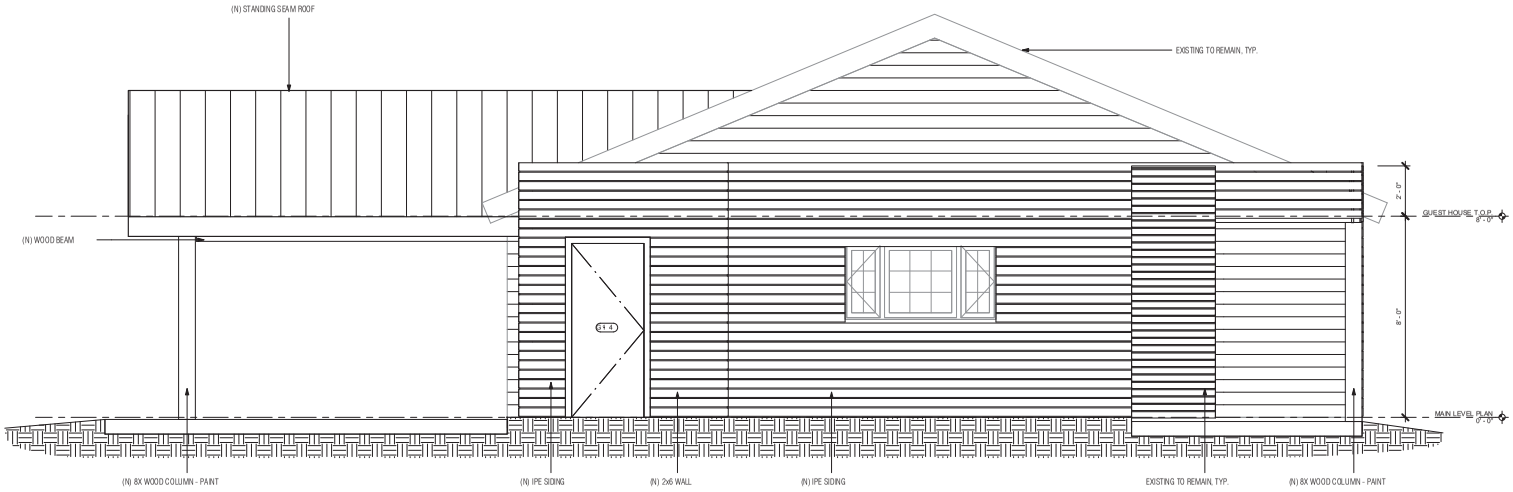

1 GUEST HOUSE NORTH ELEVATION

1/2" = 1'-0"

Any and NACE E.25.780 (E) and Drawings and Specifications are the instruments of service for this Project are the sole property of KRI Architecture & Design, LLC. They shall be used only as it respect to this specific Project. Any use or reproduction of this Drawing in whole or part by any means whatsoever is strictly prohibited, except with the specific written consent of KRI Architecture & Design, LLC.

KRI ARCHITECTURE + DESIGN
321 E. 5th St. | Reno, Nevada 89501
www.kriarchitecture.com

[client]
MIKE & TERESA GERUTTO

[project]
038-242-34

GERUTTO GUEST HOUSE REMODEL
250 HIRSH ROAD
RENO, NV 89523

[consultant]

[project number]
20-65

[status]
CONSTRUCTION DOCUMENTS

revisions		
NO.	DATE	DESCRIPTION

[license/stamp]

DAVID M. MADSEN REGISTERED No. 6766 ARCHITECT STATE OF NEVADA

2-16-21

4-19-21

[sheet title]
GUEST HOUSE ELEVATIONS

[sheet no.]
A3.1

WATERPROOF ALL SIDING AND ROOFING. TYVEK OR APPROVED EQUAL. FLASH ALL OPENINGS. TYP.

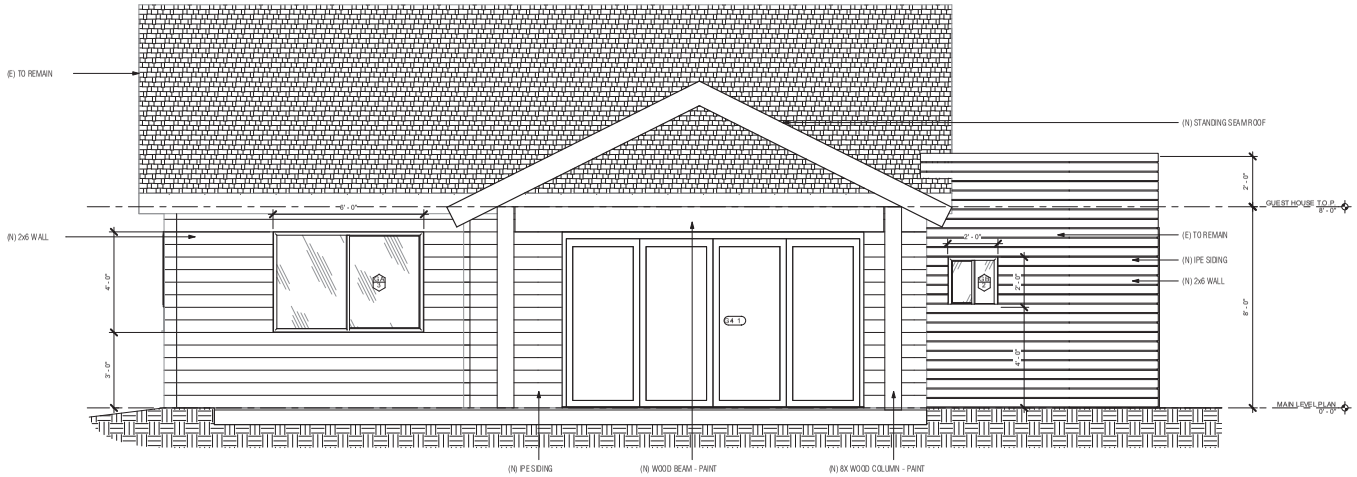

1 GUEST HOUSE EAST ELEVATION
1/2" = 1'-0"

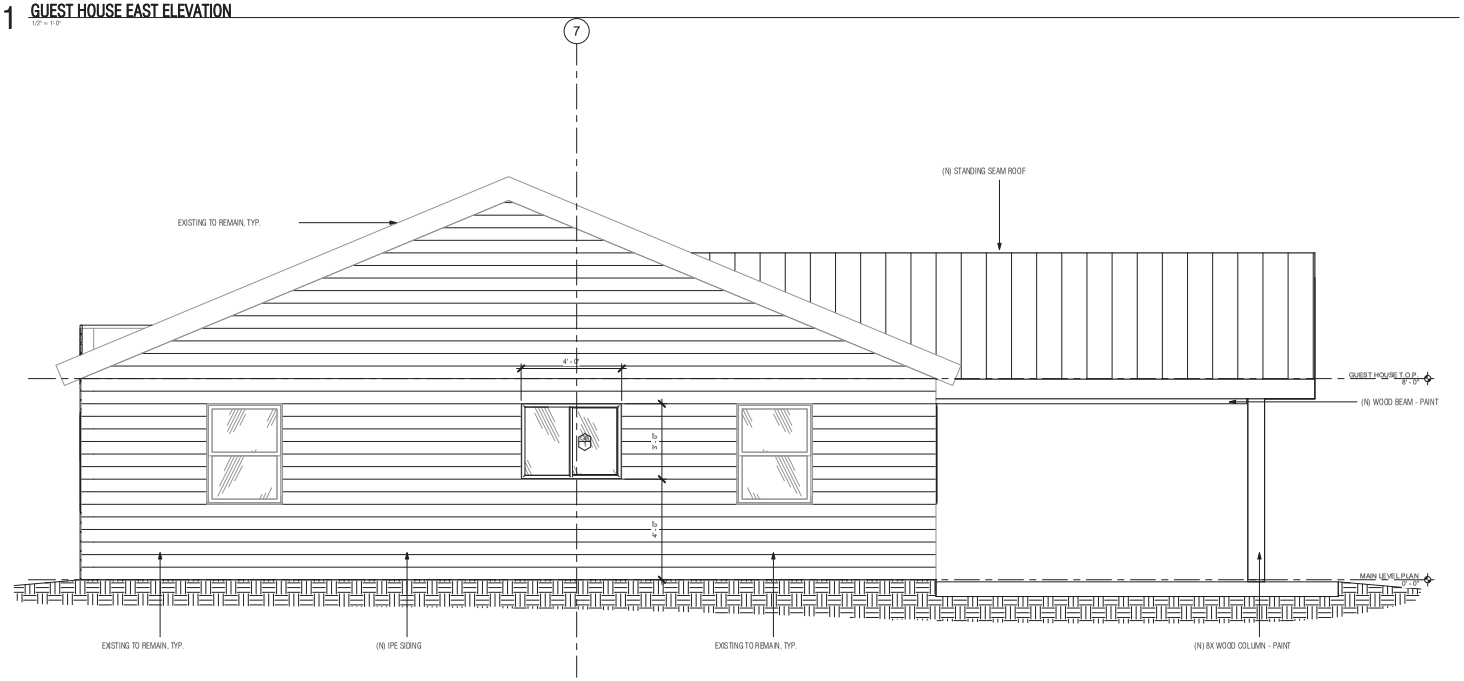

2 GUEST HOUSE SOUTH ELEVATION
1/2" = 1'-0"

KRI ARCHITECTURE + DESIGN
321 E. 5th St. | Reno, Nevada 89501
www.kriarchitecture.com

[client]
MIKE & TERESA GERUTTO

[project]
038-242-34

GERUTTO GUEST HOUSE REMODEL
250 HIRSH ROAD
RENO, NV 89523

[consultant]

[project number]
20-65

[status]
CONSTRUCTION DOCUMENTS

NO.	DATE	DESCRIPTION

[license/stamp]

DAVID M. MADSEN REGISTERED No. 6766 ARCHITECT STATE OF NEVADA

2-16-21

4-19-21

[sheet title]
GUEST HOUSE ELEVATIONS

[sheet no.]
A3.2

Any and NAUCS 2D, 3D (2) and Drawings and Specifications are instruments of service for this Project are the sole property of KRI Architecture & Design, LLC. They shall be used only as required for this specific Project. Any use or reproduction of this Drawing in whole or part by any means without consent of KRI Architecture & Design, LLC. is strictly prohibited, except with the specific written consent of KRI Architecture & Design, LLC.

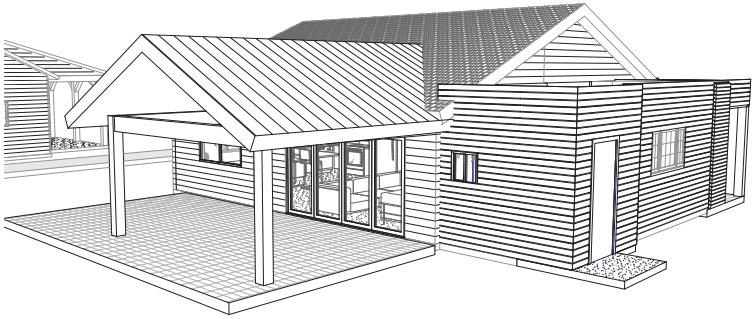

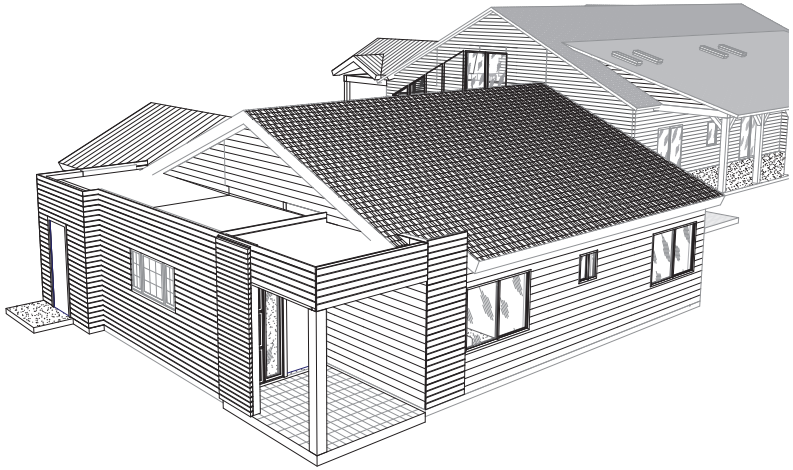

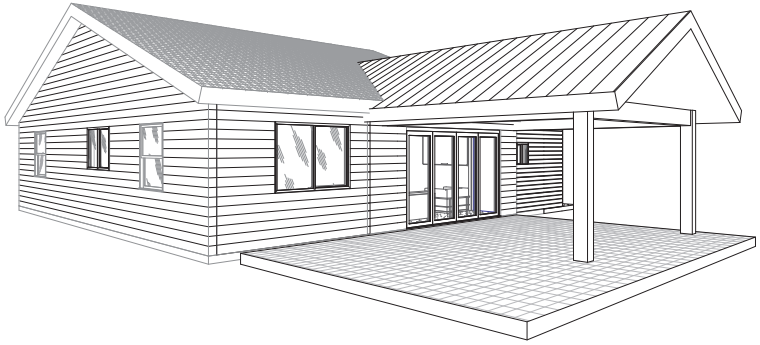

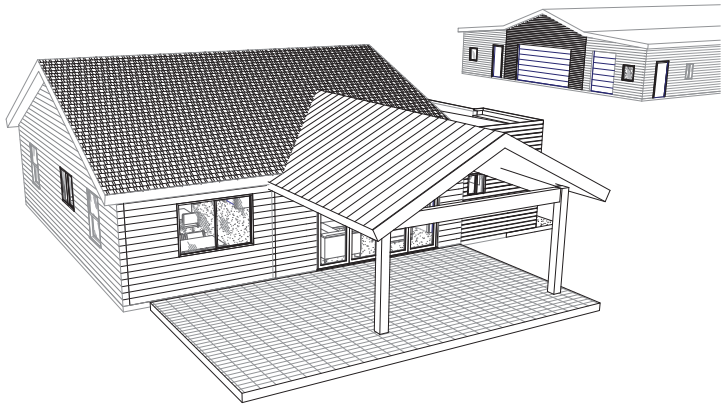

KRI ARCHITECTURE + DESIGN

321 E. 5th St. | Reno, Nevada 89501
www.kriarchitecture.com

[client]

MIKE & TERESA GERUTTO

[project]

038-242-34

GERUTTO GUEST HOUSE REMODEL

250 HIRSH ROAD
RENO, NV 89523

[project number]

20-65

[status]

CONSTRUCTION DOCUMENTS

revision	date	description
NS		

[licensing / stamp]

DAVID M. MADSEN
REGISTERED
No. 6706
ARCHITECT
STATE OF NEVADA

2-16-21

4-19-21

[sheet title]

RENDERINGS - GUEST HOUSE

[sheet no. / sheet]

A3.3

Any or all NACS E.25.780 (E) v.4 Drawings and Specifications are the instruments of service for this Project are the sole property of KRI Architecture & Design, LLC. They shall be used only as it respects to this specific Project. Any use or reproduction of this Drawing in whole or part by any means whatsoever is strictly prohibited, except with the specific written consent of KRI Architecture & Design, LLC.

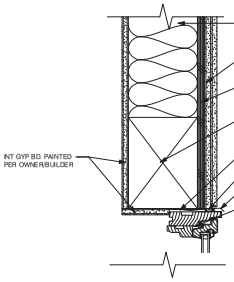

14 WINDOW HEAD
3" = 1'-0"

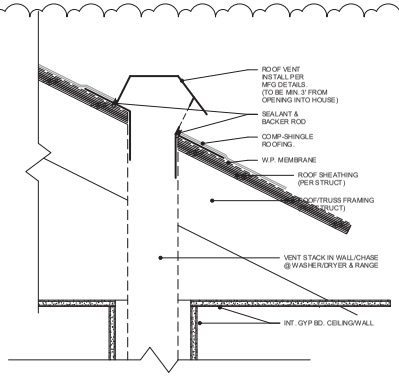

13 VENT ROOF
3" = 1'-0"

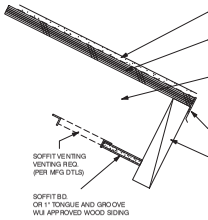

11 ROOF EAVE
3" = 1'-0"

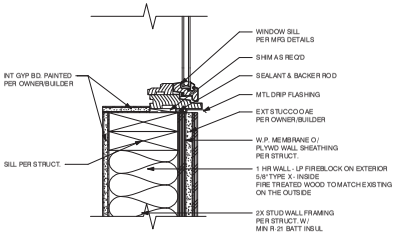

16 WINDOW SILL
3" = 1'-0"

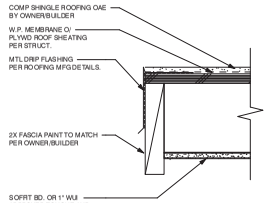

12 ROOF RAKE
3" = 1'-0"

DENOTES DESIGN STANDARDS

TABLE 503.1 IGNITION-RESISTANT CONSTRUCTION

DEFENSIBLE SPACE (Chapter 6)	Fire Hazard Severity (Chapter 4)					
	Moderate Hazard		High Hazard		Extreme Hazard	
	Water Supply		Water Supply		Water Supply	
	Conforming	Nonconforming	Conforming	Nonconforming	Conforming	Nonconforming
Nonconforming	IR 2	IR 1	IR 1	IR 1 NC	IR 1 NC	Not Permitted
Conforming	IR 3	IR 2	IR 2	IR 1	IR 1	IR 1 NC
1.5 Conforming	Not Required	IR 3	IR 3	IR 2	IR 2	IR 1

Note: IR 1 NC shall have exterior walls of 1 hour fire resistive construction and exterior siding material shall be noncombustible.

IGNITION-RESISTANT CONSTRUCTION

	Class 1 (IR1)	Class 2 (IR2)	Class 3 (IR3)
Roofs	• Class A - Roof edge/gaps fire stopped - 26 gage valley flashings	• Class B - Roof edge/gaps fire stopped - 26 gage valley flashings	• Class C - Roof edge/gaps fire stopped - 26 gage valley flashings
Eaves	• IR material • 1-hour RRC • 2" nom. dimension lumber • Or treated materials	• Enclosed with solid material (3/4" min.) • No exposed tails unless heavy timber	
Fascia	• IR material • 1-hour RRC • 2" nom. dimension lumber	• Enclosed with solid material (3/4" min.)	
Vents b,c	• < 144 square inches • < 1/4 in. noncombustible corrosion-resistant mesh • Or approved devices	• < 144 square inches • < 1/4 in. noncombustible corrosion-resistant mesh • Or approved devices	
Exteriors Walls	• Approved 1-hour RRC d • Approved noncombustible materials • Heavy timber or log wall • Fire retardant treated wood labeled for exterior use • IR material	• Approved 1-hour RRC d • Approved noncombustible materials • Heavy timber or log wall • Fire retardant treated wood labeled for exterior use • IR material	
Windows	• Tempered glass • Multilayered glazed panels • Glass block • Min. 20 minute rating	• Tempered glass • Multilayered glazed panles • Glass block • Min. 20 minute rating	
Doors e	• Approved noncombustible construction • Solid core (1 3/4" min.) • Min. 20 minute rating	• Approved noncombustible construction • Solid core (1 3/4" min.) • Min. 20 minute rating	
Appendages (i.e., Deck)f	• 1-hour RRC • Heavy timber • Approved noncombustible materials • Fire retardant treated wood labeled for exterior use • IR material	• 1-hour RRC • Heavy timber • Approved noncombustible materials • Fire retardant treated wood labeled for exterior use • IR material	
Undoseed Underfloor	• Enclosed to ground • 1-hour RRC • Heavy timber • Fire retardant treated wood labeled for exterior use	• Enclosed to ground • 1-hour RRC • Heavy timber • Fire retardant treated wood labeled for exterior use	• Enclosed to ground • 1-hour RRC • Heavy timber
Gutters & Downspouts	• Noncombustible material • Prevent accumulation of leaves and debris	• Noncombustible material • Prevent accumulation of leaves and debris	• Noncombustible material • Prevent accumulation of leaves and debris

Key
IR = Ignition-Resistant
RRC = Fire Resistant Rated Construction

a. When provided.
b. Gable end, soffit, eave, and dormer vents shall be located at least 10 feet (3048 mm) from lot lines.
c. Attic ventilation openings at soffits, eaves, or overhang areas must be approved devices only.
d. On the exterior side.
e. Exception: Vehicle access door.
f. See WUI Codes, amendments, and guide for additional restrictions or exceptions.

17 WUI Standards 1
12" = 1'-0"

Doors & Windows

1 THRESHOLDS AT DOORWAYS SHALL BE 1/2" HIGH MAXIMUM

2 ALL WINDOWS MUST BE TEMPERED AND WUI COMPLIANT

DOOR SCHEDULE

TYPE	#	WIDTH	HEIGHT	MATERIAL	COMMENTS
G1	1	3' - 0"	7' - 0"		
G1	2	3' - 0"	7' - 0"		
G1	3	3' - 0"	7' - 0"		
G1	4	3' - 0"	7' - 0"		
G1	5	3' - 0"	7' - 0"		
G2	1	2' - 8"	7' - 0"		
G2	2	2' - 8"	7' - 0"		
G3	1	6' - 0"	7' - 0"		
G3	2	6' - 0"	7' - 0"		
G4	1	12' - 0"	7' - 0"		

WINDOW SCHEDULE

TYPE	#	ROOM #	ELEV	WIDTH	HEIGHT	HEAD HEIGHT	MATERIAL	HEAD	JAMB	SILL	COMMENTS
GA	1			6' - 0"	4' - 0"	6' - 7 3/4"					
GA	2			6' - 0"	4' - 0"	6' - 8"					
GA	3			6' - 0"	4' - 0"	7' - 0"					
GB	1			2' - 0"	2' - 0"	6' - 8"					
GB	2			2' - 0"	2' - 0"	6' - 8"					
GC	1			1' - 6"	7' - 0"	7' - 0"					
GD	1			2' - 6"	2' - 4"	7' - 0"					
GD	2			2' - 6"	2' - 4"	4' - 8"					
GD	3			2' - 6"	2' - 4"	2' - 4"					
GE	1			4' - 0"	3' - 0"	7' - 0"					

COORDINATE ALL DOORS AND WINDOWS WITH OWNER.

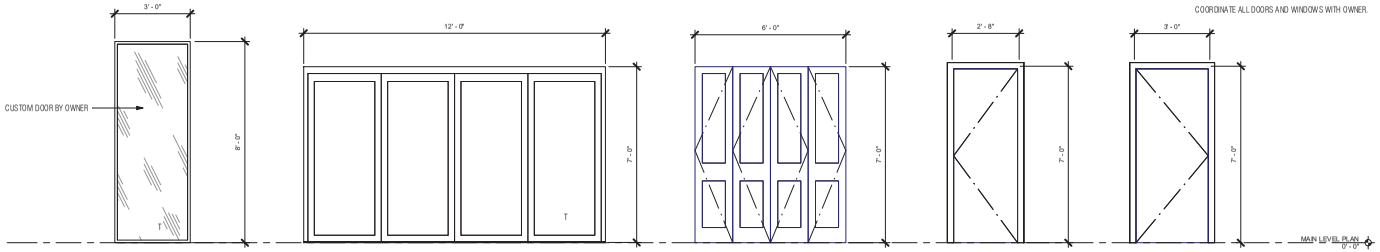

DOOR G5 DOOR G4 DOOR G3 DOOR G2 DOOR G1

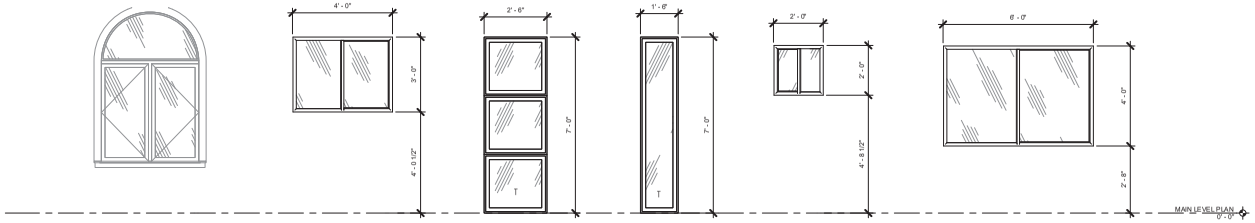

B GE GD GC GB A/GA

KRI ARCHITECTURE + DESIGN
321 E. 5th St. | Reno, Nevada 89501
www.kriarchitecture.com

[client]
MIKE & TERESA GERUTTO

[project]
038-242-34

GERUTTO GUEST HOUSE REMODEL
250 HIRSH ROAD
RENO, NV 89523

[status]

[project number]
20-65

[status]
CONSTRUCTION DOCUMENTS

[revision] NO.	DATE	DESCRIPTION
1	Date 1	Revision 1

[licensee/stamp]

4-19-21

[date issued] 4-19-21

[sheet title]
DOORS AND WINDOWS

[sheet number]
A8.1

Any and/or all ideas, designs and specifications as are shown in or contained in or serve for this Project are the sole property of KRI Architecture & Design, LLC. They shall be used only and for respect to this specific Project. Any use or reproduction of this drawing in whole or part by any means whatsoever is strictly prohibited, except with the specific written consent of KRI Architecture & Design, LLC.

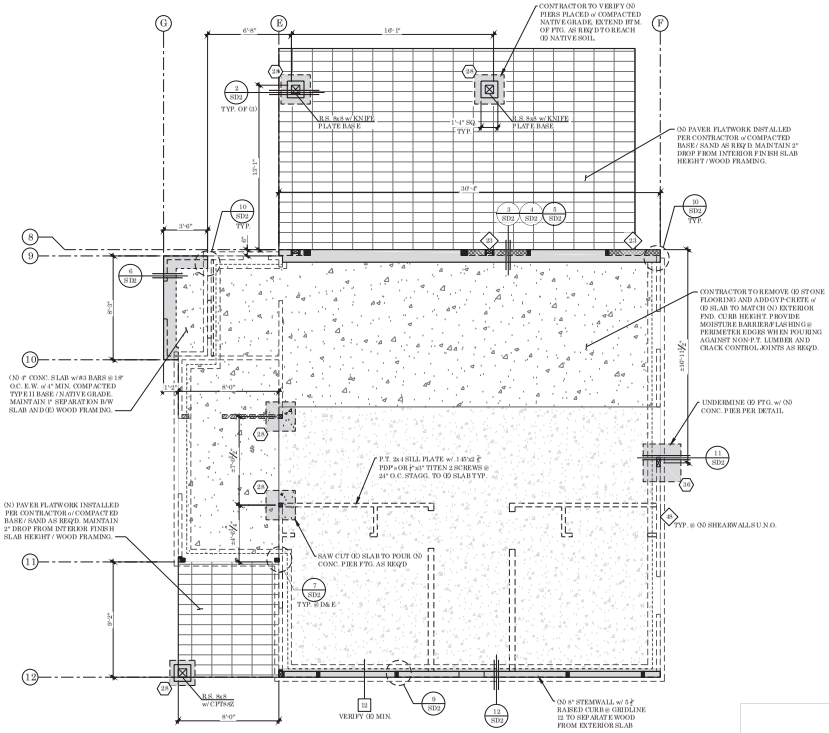

GUEST HOUSE - FOUNDATION PLAN

SCALE 1/4" = 1'-0"

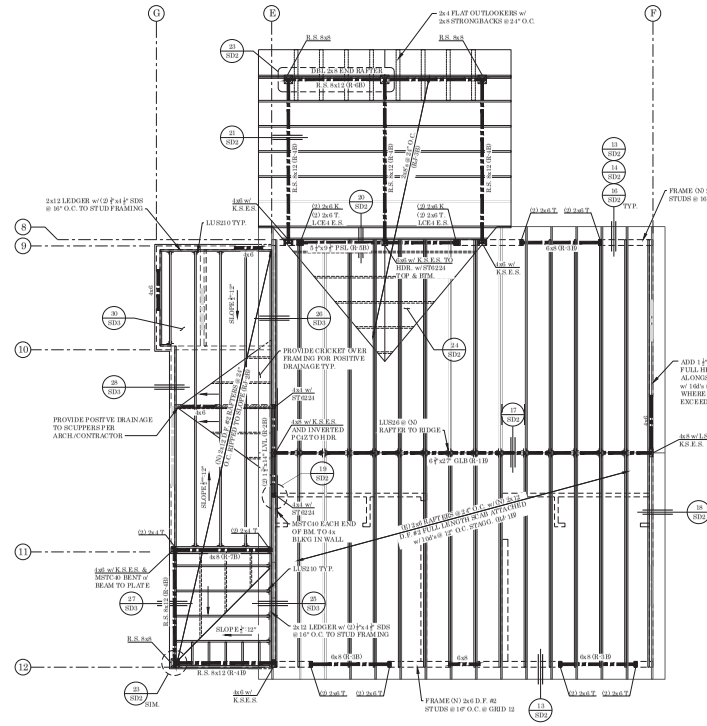

GUEST HOUSE - ROOF FRAMING PLAN

SCALE 1/4" = 1'-0"

FRAMING PLAN LEGEND

- SEE SHEET SD-1 FOR ADDITIONAL NOTES AND SCHEDULES
- (2) STANDARD CONC. STEMWALL AND FOOTING w/ DRILL & EPOXIED HOLDOWN AS OCCURS. SEE DETAILS 7/SD2 & 9/SD2 FOR ADDITIONAL INFO. SPECIAL INSPECTION IS REQ'D AT "D& E" HD's.
- INDICATES CONCRETE PIER FOOTING PER SCHEDULE ON SHEET SD-1
- INDICATES (N) CONT. CONC. FTG. PER PLAN / DETAILS.
- USE P.T. 2x6 SILL PLATE w/ 1/2"Øx10" ABs @ 2/3" O.C. AS INDICATED ON PLANS. 3x SILL PLATE NOT REQ'D AT THE TYPE 3 SHEARWALL SPECIFIED.
- (2) 2x STUD WALL
- (N) WALL, 2x D.F. #2 STUDS @ 16" O.C. U.N.O.
- (2) WOOD BEAM
- (N) WOOD BEAM
- (2) FLOOR / ROOF JOIST
- (N) FLOOR / ROOF JOIST
- 1/2"Ø ANCHOR BOLT SPACING, 48" O.C. TYP. U.N.O. ADD 1/2"x8" MIN. T-TITEN HDP's AS REQ'D TO ACHIEVE MIN. SPACING ON PLANS @ (2) STEMWALLS
- CONT. STRIP FOOTING PER SCHEDULE ON SHEET SD-1
- INDICATES CONCRETE PIER FOOTING PER SCHEDULE ON SHEET SD-1
- DETAIL CALLOUT - SEE STRUCT. DETAIL SHEETS (SD's)

ALL DIMENSIONS SHOWN ARE APPROXIMATE. SEE ARCH. PLANS AND FIELD VERIFY TO CONFIRM DIMENSIONS FOR CONSTRUCTION.

SHEARWALL PLAN LEGEND

- SEE SHEET SD-1 FOR ADDITIONAL NOTES AND SCHEDULES
- 6 | 10'-0" SHEARWALL TYPE - SEE SHEET SD1 FOR ADDITIONAL INFORMATION
- TYPICAL WALL w/ SHEARPLY AND HOLDOWNS. SEE DETAILS 7/SD2 & 9/SD2 FOR ADDITIONAL INFO. SPECIAL INSPECTION IS REQ'D AT "D& E" HD's.
- 3x OR DBL 2x FRAMING MEMBERS CONNECTED W/ (2) 16d's @ 12" O/C AT ADJOINING PANEL EDGES

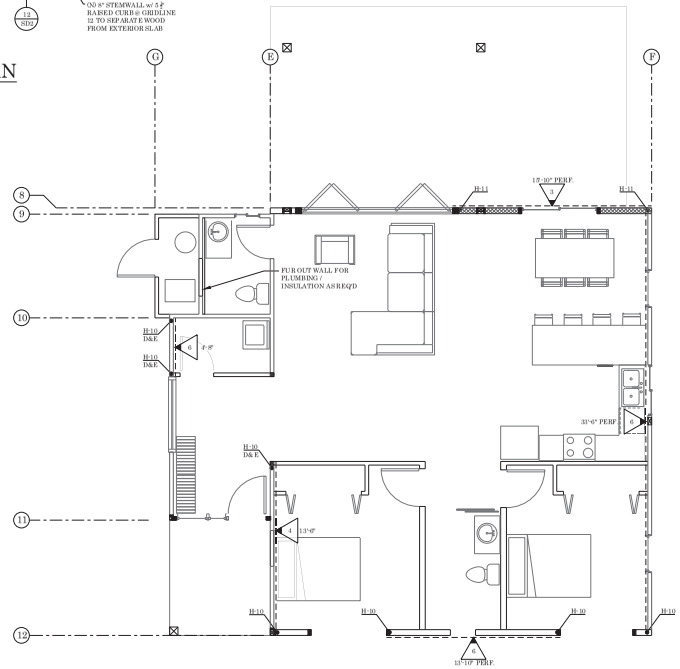

GUEST HOUSE - SHEARWALL PLAN

SCALE 1/4" = 1'-0"

CONCRETE NOTES

USE MIN. 3000 PSI COMPRESSIVE STRENGTH (28 DAY) CONC. FOR ALL FOOTINGS, RETAINING WALLS, AND PEDESTALS. USE MIN. 4000 PSI COMPRESSIVE STRENGTH CONC. FOR ALL CONCRETE SLABS U.N.O. (NO STRENGTH TESTING REQ'D UNLESS COMPRESSIVE STRENGTH IS GREATER THAN 3000 PSI. TYP. DESIGN BASED ON 2,500 PSI CONC.)

CONC. MONO-POURED FOOTINGS TO BE 12" WIDE W/ 2-#4 REBAR. CONT. 3" CLEAR FROM BOTTOM & 1-#4 REBAR CONT. @ TOP. FOOTING SHALL BEAR ON NATIVE GRADE OR AS DIRECTED BY GEOTECHNICAL ENGINEER. FOOTING SHALL BE A MIN. OF 2'-0" BELOW FINISHED GRADE.

ALL SLABS TO BE 4" THICK CONCRETE w/ #3 BARS @ 18" O/C E.W. OR 6x6 10/10 WELDED WIRE FABRIC REINFORCING AND SHALL BE PLACED OVER 6" MIN. TYP.E.11 BASE COMPACTED TO 95% ON COMPACTED NATIVE SOIL. PER SOILS REPORT. ALL PAVER SYSTEMS TO BE INSTALLED w/ 6" MIN. COMPACTED BASE/GRADE AND SAND PER CONTRACTOR & SOILS REPORT.

FOR 2x SILL PLATE, USE 1/2"Ø x 10" A.B. FOR 3x OR DOUBLE SILL PLATE, USE 1/2"Ø x 12" A.B. EXTEND SILL BOLTS 7" INTO FOUNDATION MINIMUM. MAXIMUM SPACING SHALL BE 4'-0" O.C. WITH MINIMUM (2) BOLTS IN EACH SILL BOARD. BOLTS SHALL BE LOCATED NOT MORE THAN (12) NOR LESS THAN (7) BOLT DIAMETERS FROM EACH END OF SILL PIECE. MINIMUM 3"x3"x1/4" THICK PLATE WASHERS SHALL BE INSTALLED ON EACH SILL BOLT.

SILL PLATE USE FOUNDATION GRADE REDWOOD OR TIMBERSTRAND LSL TREATED w/ ZINC BORATE OR PRESSURE TREATED DOUGLAS FIR MUDSILL. SEE SHEARWALL SCHEDULE FOR IMPORTANT INFORMATION REGARDING SILL PLATES. FOR ALL SILL PLATES NOTED. USE 2x WALL WIDTH WOOD SILL. ALL SHEAR WALLS, EXCEPT TYPE "6" & "1", REQUIRE FOUNDATION SILL PLATES & ALL FRAMING MEMBERS RECEIVING EDGE NAILING FROM ABUTTING PANELS TO BE NOT LESS THAN A SINGLE 3" NOMINAL MEMBER. PLYWOOD JOINT & SILL PLATE NAILING SHALL BE STAGGERED IN ALL CASES.

ROOF FRAMING NOTES

ROOF LOADS: GUEST HOUSE - SNOW 25# SQ. FT. - DEAD 20# SQ. FT.
COVERED PATIO - SNOW 25# SQ. FT. - DEAD 15# SQ. FT.

(E) ROOF SHEATHING TO REMAIN UNLESS CONTRACTOR DETERMINES CONDITION IS INADEQUATE AND (N) IS REQ'D. SEE DETAILS FOR ADDITIONAL NAILING REQUIREMENTS.

ALL FRAMING HARDWARE NOTED SHALL BE "SIMPSON" INSTALL PER MANUFACTURES REQUIREMENTS.

ALL GLU-LAM BEAMS SHALL BE DOUG-FIR 24F-V4 U.N.O.

TYP HEADER U.N.O. USE 4x8 D.F. #2

USE 12-16d BETWEEN TOP PLAT & SPLICES. TYP U.N.O.

USE 2x6 FLAT OUTLOOKERS @ 24" O.C. w/ 2x6 STRONGBACK @ 48" O.C. @ GABLE END FRAMING

PROVIDE G.I. FLASHING @ ALL VALLEYS & ROOF-TO-WALL CONNECTIONS. TYP PROVIDE BITUTHANE MEMBRANE @ CRICKETS SLOPING LESS THAN 3:12 & AS NOTED ON ROOF PLAN

USE BOUNDARY NAILING @ ALL DRAG MEMBERS U.N.O.

PROVIDE H1's @ EACH RAFTER AND A35's @ 48" O.C. RAFTER BLKG TO TOP PLATE TYP U.N.O.

PROVIDE ICE & WATER DAM MEMBRANE @ HIP'S, EAVES, VALLEYS & RIDGES AS PER LOCAL BLDG DEPT STANDARDS

PROVIDE SNOW DIVERTERS @ ALL ROOF PENETRATIONS

PROVIDE ROOF VENTILATION PER I.R.C. SECTION R806.1

PROVIDE BLOCKING @ ALL RIDGES, HIPS & VALLEYS TYP

PROVIDE CONT ROOF PLY UNDER ALL ROOF OVER FRAMING

RWE
RW ENGINEERING
575 East Plumb Lane
Suite 101
Reno, NV 89502
(775) 393-9128
RWEngineering.net

Gerutto Residence
(Guest House Remodel)

Project Address:
250 Hirsh Road
Washoe County, NV 89523
APN: 038-242-34

Date	02/18/21
Drawn	RSW
Project #	20-070

RUSSELL S. WALLACE
Reno, NEVADA
No. 15837
CIVIL
02/18/2021
Russell S. Wallace, PE

Revisions:

Guest House Fnd, Shear & Framing Plan

S-1

Project Standard Structural Notes

THE GENERAL CONTRACTOR AND ALL INVOLVED PARTIES ARE RESPONSIBLE FOR READING AND UNDERSTANDING THE NOTES LISTED IN THE PLANS. RW ENGINEERING ASSUMES NO LIABILITY IF ANY INVOLVED PARTY FAILS TO COMPLY WITH THE NOTES AND SPECIFICATIONS IN THE PLANS.

1.0 GENERAL

1. GENERAL NOTES LISTED ON THIS SHEET ARE APPLICABLE TO ALL WORK SHOWN IN THE STRUCTURAL DRAWINGS. IT IS THE RESPONSIBILITY OF THE GENERAL CONTRACTOR AND ALL INVOLVED PARTIES TO READ AND COMPLY WITH ALL INFORMATION PROVIDED IN THE STRUCTURAL DRAWINGS AND SPECIFICATIONS.
2. ALL WORK SHALL COMPLY WITH THE MINIMUM STANDARDS OF THE CURRENT EDITION OF THE INTERNATIONAL BUILDING CODE (IBC), ASCE 7, ASTM AND/OR OTHER INDUSTRY STANDARDS REFERENCED. ALL APPLICABLE LOCAL, STATE AND FEDERAL REQUIREMENTS AND REGULATIONS SHALL BE FOLLOWED. FOR ITEMS, METHODS, AND/OR MATERIALS NOT SHOWN SPECIFICALLY IN THE PLANS, ALL WORK SHALL CONFORM TO THE MINIMUM STANDARDS OF THE REGULATING AGENCIES THAT HAVE AUTHORITY OVER SUCH ITEMS.
2. THE CONTRACTOR SHALL COMPLY WITH ALL GENERAL NOTES AND TYPICAL DETAILS SHOWN IN THE DRAWINGS, WHETHER OR NOT SPECIFIC FLAGGING OR REFERENCE HAS BEEN MADE TO THE APPLICABLE GENERAL NOTE OR TYPICAL DETAIL. PROJECT SPECIFIC NOTES AND DETAILS SHOWN ON THE DRAWINGS SHALL TAKE SUPERSEDE GENERAL NOTES AND TYPICAL DETAILS.
3. THE STRUCTURAL DRAWINGS AND SPECIFICATIONS REPRESENT THE FINISHED STRUCTURE. THEY DO NOT INDICATE MEANS OR METHODS OF CONSTRUCTION. THE CONTRACTOR SHALL PROVIDE ALL MEASURES NECESSARY TO PROTECT THE STRUCTURE, WORKERS, AND OTHER INVOLVED PARTIES DURING CONSTRUCTION. SUCH MEASURES SHALL INCLUDE, BUT NOT BE LIMITED TO, PREPARATION AND EXECUTION OF A SAFETY PROGRAM AND THE DESIGN AND INSTALLATION OF BRACING, SHORING, FORMS AND SCAFFOLDING. THE CONTRACTOR SHALL CONSULT RW ENGINEERING AND/OR RETAIN HIS OWN ENGINEER AS REQUIRED FOR MEANS AND METHODS AS WELL AS ANY OTHER DELEGATED DESIGN ITEMS. RW ENGINEERING DOES NOT ASSUME LIABILITY FOR THE REVIEW, APPROVAL OR DESIGN OF PROPOSED MEANS AND METHODS PROVIDED BY THE CONTRACTOR OR HIRED THIRD PARTIES.
4. THE CONTRACTOR IS DIRECTLY RESPONSIBLE FOR VERIFYING ALL DIMENSIONS, ELEVATIONS AND CONDITIONS BETWEEN ARCHITECTURAL, STRUCTURAL AND OTHER DRAWINGS (I.E. CIVIL, MECHANICAL, PLUMBING, ELECTRICAL, ETC.) PRIOR TO CONSTRUCTION. RW ENGINEERING SHALL BE NOTIFIED OF ANY DISCREPANCIES, OMISSIONS OR INCONSISTENCIES BETWEEN EXISTING DIMENSIONS OR FIELD CONDITIONS AND THOSE SHOWN IN THE PLANS AND DETAILS. REVISIONS OR CLARIFICATIONS WILL BE MADE IF DEEMED NECESSARY TO CONTINUE THE PROJECT. THE CONTRACTOR SHALL BE HELD RESPONSIBLE FOR THE RESULTS OF ANY ERRORS, DISCREPANCIES, OR OMISSIONS WHICH THE CONTRACTOR FAILED TO NOTIFY RW ENGINEERING OF BEFORE CONSTRUCTION AND/OR FABRICATION OF THE WORK.
5. THE CONTRACTOR IS DIRECTLY RESPONSIBLE FOR COORDINATING THE FOLLOWING TYPES OF ITEMS, WHICH ARE TYPICALLY SHOWN ON ARCHITECTURAL DRAWINGS: SIZES AND LOCATIONS OF WINDOW AND DOOR OPENINGS, CONCRETE CURBS, FLOOR DRAINS AND DEPRESSED SLAB AREAS, FLOOR AND INTERIOR OR EXTERIOR NON-STRUCTURAL WALLS PARTITIONS, ETC.
6. THE CONTRACTOR IS DIRECTLY RESPONSIBLE FOR COORDINATING THE FOLLOWING TYPES OF ITEMS WHICH ARE TYPICALLY SHOWN ON MECHANICAL, PLUMBING, AND ELECTRICAL DRAWINGS: SIZES AND LOCATIONS OF MECHANICAL EQUIPMENT, DUCTWORK RUNS, CONDUIT OR CABLE TRAY RUNS, PIPE RUNS, AND ALL ASSOCIATED SLEEVES, PENETRATIONS, OPENINGS, HANGERS, INSERTS, ETC.
6. WHERE SHOP DRAWINGS ARE REQUIRED TO BE SUBMITTED FOR REVIEW AND APPROVAL, THEY SHALL BE COMPLETE AND COORDINATED BY THE CONTRACTOR.
6. DO NOT SCALE THE DRAWINGS: THEY ARE DIAGRAMMATIC AND MAY NOT SCALE ACCURATELY.
7. THE CONTRACTOR AGREES TO CONSTRUCT THE PROJECT IN ACCORDANCE WITH THE SEALED AND APPROVED STRUCTURAL DESIGN. ANY MODIFICATIONS TO THE APPROVED DESIGN SHALL BE APPROVED BY RW ENGINEERING AND ALL NECESSARY REVIEWING AGENCIES PRIOR TO IMPLEMENTATION.
8. RW ENGINEERING SHALL RETAIN ALL COMMON LAW, STATUTORY AND OTHER RESERVED RIGHTS, INCLUDING COPYRIGHT OF THESE PLANS. NO REPRODUCTIONS, MODIFICATIONS, CHANGES TO THE INTENDED USE, OR ASSIGNMENT OF THE PLANS AND/OR SPECIFICATIONS TO A THIRD PARTY WITHOUT THE PRIOR WRITTEN AUTHORIZATION OF RW ENGINEERING IS PERMITTED. THE CLIENT OR INVOLVED THIRD PARTY AGREES TO DEFEND, INDEMNIFY AND HOLD RW ENGINEERING HARMLESS FROM CLAIMS ARISING OUT OF THE UNAUTHORIZED REUSE OF THESE PLANS.
9. IT IS RW ENGINEERING'S RIGHT TO PERFORM OBSERVATION VISITS TO THE SITE AT ANY TIME. OBSERVATIONS ARE PERFORMED SPECIFICALLY TO DETERMINE IF THE CONTRACTOR UNDERSTANDS DESIGN INTENT CONVEYED IN THE PLANS. AN OBSERVATION DOES NOT GUARANTEE THE CONTRACTOR'S PERFORMANCE, NOR IS IT TO BE CONSTRUED AS SUPERVISION OF THE PROJECT.
10. ALL NOTES AND DETAILS SHOWN IN THE DRAWINGS ARE TYPICAL U.N.O. SIMILAR NOTES AND DETAILS APPLY TO SIMILAR CONDITIONS. NO DEVIATIONS FROM STRUCTURAL NOTES OR DETAILS SHALL BE MADE WITHOUT THE PRIOR WRITTEN APPROVAL OF RW ENGINEERING.

2.0 SITE/EARTH WORK & FILL/BACKFILL

1. RW ENGINEERING HAS NOT MADE A GEOTECHNICAL REVIEW OF THE BUILDING SITE, THEREFORE THE EARTHWORK REQUIREMENTS AND FOUNDATIONS DESIGNS ARE BASED ON TYPICAL LOCAL VALUES AND ASSUME THE PRESENCE OF ADEQUATE NATIVE SOILS TO BUILD ON. RW ENGINEERING IS NOT RESPONSIBLE FOR GENERAL SITE STABILITY OR SOIL SUITABILITY FOR THE PROPOSED PROJECT. IT IS RECOMMENDED A REVIEW OF THE SITE BY A GEOTECHNICAL ENGINEER OR A QUALIFIED CIVIL ENGINEER TO DETERMINE GENERAL SITE STABILITY AND SOIL SUITABILITY FOR THE PROJECT IS PERFORMED.
2. BUILDING SITES ARE ASSUMED TO BE DRAINED AND FREE OF CLAY OR EXPANSIVE SOIL. ALL FOOTINGS SHALL BE LEVEL OR STEPPED AND BEAR ON FIRM, STABLE, NATURAL, UNDISTURBED SOIL OR AN APPROVED COMPACTED FILL.
3. PERIMETER OR EXTERIOR FOOTING DEPTHS MUST EXTEND BELOW FROSTLINE (18" OR 24" AS PER LOCAL CODE REQUIREMENTS). ALL OTHER FOOTINGS (INTERIOR) SHALL BOTTOM 12" MINIMUM BELOW NATURAL UNDISTURBED GRADE.
4. BUILDING PADS SHALL BE GRADED 2% TOWARD APPROVED DRAINAGE FACILITIES AND PROVISIONS SHALL BE MADE TO CONTROL AND DRAIN SURFACE WATER AROUND BUILDING.
5. ASSUME CLASS D SOILS WITH ALLOWABLE SOIL BEARING PRESSURE OF 2000 PSF WITH A CONSTANT EXPANSION INDEX LESS THAN 20. SOIL BEARING PRESSURE HAS BEEN DETERMINED IN ACCORDANCE WITH IBC TABLE 1806.2.
6. FILL MATERIAL SHALL BE FREE FROM DEBRIS, VEGETATION, AND OTHER FOREIGN SUBSTANCES.
7. BACKFILL TRENCHES SHALL BE COMPACTED TO 90% DENSITY PER ASTM 1557 TO WITHIN 12" OF FINISHED GRADE. THE TOP 12" SHALL BE LANDSCAPE FILL. BACKFILL AT PIPE TRENCHES SHALL BE COMPACTED ON BOTH SIDES OF PIPE IN 6" LIFTS.
8. WATERPROOF EXTERIOR FACES OF ALL FOUNDATION WALLS ADJACENT TO USABLE SPACES. WATERPROOFING OF ALL FOUNDATION AND RETAINING WALLS TO BE THE RESPONSIBILITY OF THE OWNER AND/OR CONTRACTOR.
9. ALL BACKFILL AGAINST FOUNDATION WALLS MUST BE COMPACTED TO 90% RELATIVE DENSITY.
10. PROVIDE A 4" DIAMETER PVC PERFORATED DRAINPIPE AT GRADE SIDE OF ALL RETAINING WALLS. SLOPE PIPE TO DRAIN TO DAYLIGHT AND DRYWELL.

3.0 CONCRETE

1. REINFORCED CONCRETE WORK SHALL CONFORM TO APPLICABLE REQUIREMENTS OF THE IBC AND ACI STANDARD 318.
2. AGGREGATE SHALL CONFORM TO ASTM C33 FOR STONE CONCRETE. COMPRESSION STRENGTH OF ALL REINFORCED CONCRETE SHALL NOT BE LESS THAN 3000 PSI AT 28 DAYS. STRUCTURAL DESIGN BASED ON F'c = 2500 PSI (SPECIAL INSPECTION NOT REQUIRED).
3. USE NORMAL WEIGHT CONCRETE (145 PCF) FOR ALL CONCRETE. USE TYPE II CEMENT TYPICAL. IF SOIL CONTAINS SULFATE CONCENTRATIONS OF .2% OR MORE, USE TYPE V CEMENT.
4. MAXIMUM WATER/CEMENT RATIO SHALL BE .55 FOR 3000 PSI CONCRETE. THE MAXIMUM SLUMP SHALL NOT EXCEED 3". PLASTICIZERS MAY BE USED TO INCREASE SLUMP TO 8" MAXIMUM PROVIDED THEY DO NOT INCREASE SHRINKAGE.
5. FOLLOW RECOMMENDED PRACTICES FOR HOT AND COLD WEATHER CONCRETING BY OBSERVING ACI 305 AND ACI 306 GUIDELINES.
6. PROVIDE STANDARD CRACK CONTROL JOINTS IN ALL SLABS ON GRADE USING MAXIMUM DIMENSION OF 10 FEET FOR 4" SLABS AND 12 FEET FOR 6" SLABS U.N.O. JOINT DEPTH SHALL NOT EXCEED ONE-FOURTH OF SLAB DEPTH.
7. TOP OF CONCRETE SLABS SHALL BE MINIMUM 6" ABOVE FINISHED GRADE U.N.O.. EXTERIOR SLABS ON GRADE SHALL CONTAIN NOT LESS THAN 5% NOR MORE THAN 6% ENTRAINED AIR. CONCRETE STOOPS TO BE MACHINED MIXED AND PLACED IN ACCORDANCE WITH THE IBC.
8. PIPES MAY PASS THROUGH STRUCTURAL CONCRETE IN SLEEVES, BUT SHALL NOT BE EMBEDDED THEREIN. PIPES OR DUCTS EXCEEDING ONE-THIRD THE SLAB OR WALL THICKNESS SHALL NOT BE PLACED IN STRUCTURAL CONCRETE.
9. DO NOT PLACE CONCRETE UNTIL ALL REINFORCEMENT, CONDUIT, OUTLET BOXES, ANCHORS, HANGERS, SLEEVES, BOLTS, HOLDOWNS, ANCHOR BOLTS OR OTHER EMBEDDED MATERIALS AND ITEMS ARE SECURELY AND PROPERLY FASTENED IN THEIR PROPER PLACES AND POSITIONS.

4.0 REINFORCING STEEL

1. REINFORCING BARS SHALL BE DEFORMED BARS CONFORMING TO THE REQUIREMENTS OF ASTM A615 GRADE 60 FOR ALL #5 AND LARGER BARS AND GRADE 40 FOR ALL #4 AND SMALLER BARS.
2. ALL DETAILS OF FABRICATION AND INSTALLATION OF REINFORCING STEEL SHALL BE IN ACCORDANCE WITH THE ACI MANUAL OF STANDARD PRACTICE.
3. WELDED FABRIC (MESH) SHALL CONFORM TO LATEST REVISED ASTM A185 AND BE FURNISHED IN FLAT SHEETS. SMOOTH WIRE FABRIC SHALL CONFORM TO ASTM A-85 HAVING A YIELD STRENGTH OF 60 KSI.
4. ALL BARS SHALL BE LAPPED WITH A MINIMUM OF 40 BAR DIAMETERS (2' MINIMUM) AT ALL SPLICES. SPLICES OF HORIZONTAL REBAR IN WALLS AND FOOTINGS SHALL BE STAGGERED 4' MINIMUM.
5. DOWELS FOR WALLS AND COLUMNS SHALL BE THE SAME SIZE AND SPACING AS THE WALL/COLUMN REINFORCING.
6. WELDING OF REINFORCING STEEL SHALL CONFORM TO AWS D12-1 USING LOW HYDROGEN ELECTRODES.
7. ALL REINFORCING STEEL SHALL BE ACCURATELY LOCATED AND ADEQUATELY SECURED IN POSITION BEFORE AND DURING PLACEMENT OF CONCRETE.
8. MASONRY REINFORCEMENT, BOLTS, ETC. SHALL HAVE MINIMUM GROUT COVERAGE OF THREE-FOURTHS OF AN INCH.
9. REINFORCEMENT COVER IN CAST-IN-PLACE CONCRETE SHALL BE AS FOLLOWS: 3" - CONCRETE CAST AGAINST AND PERMANENTLY EXPOSED TO EARTH 2" - FORMED SURFACES EXPOSED TO GROUND OR WEATHER

5.0 MASONRY

1. ALL CONCRETE MASONRY UNITS SHALL CONFORM TO ASTM C90, GRADE N. F'M = 1500 PSI. USE 85 PCF MINIMUM WEIGHT UNITS ABOVE GRADE AND 110 PCF MINIMUM WEIGHT UNITS BELOW GRADE. USE MOISTURE CONTROLLED UNITS ONLY. USE OPEN-END MASONRY UNITS AS MUCH AS POSSIBLE AND AT WALL INTERSECTIONS.
2. ALL BRICK SHALL CONFORM TO ASTM C62, GRADE MW. MORTAR FOR CONCRETE MASONRY SHALL CONFORM TO ASTM C270, TYPE S.
3. GROUT FOR CONCRETE MASONRY SHALL BE IN ACCORDANCE WITH IBC SECTION 2103. MINIMUM 28-DAY COMPRESSIVE STRENGTH SHALL NOT BE LESS THAN 2000 PSI.
4. ALL WALLS SHALL BE GROUTED SOLID. GROUT SHALL BE VIBRATED INTO PLACE AND SHALL BE PLACED IN LIFTS NOT EXCEEDING 4' UNLESS APPROPRIATE CLEANOUT HOLES ARE PROVIDED IN ACCORDANCE WITH IBC.
5. AGGREGATES FOR MORTAR AND GROUT SHALL BE NATURAL SAND AND ROCK CONFORMING TO ASTM C-144 (MORTAR) AND C-404 (GROUT). CEMENT SHALL BE PORTLAND CEMENT CONFORMING TO ASTM C-150, TYPE I OR II, LOW ALKALI.
6. ALL CONCRETE BLOCK AND BRICK SHALL BE LAID IN RUNNING BOND.
7. WHEN ABSOLUTELY NECESSARY FOR CONSTRUCTION PURPOSES TO STOP OFF LONGITUDINAL RUNS OF MASONRY, STOP OFF ONLY BY RACKING BACK ONE-HALF UNIT LENGTH IN EACH COURSE. TOOTHING SHALL NOT BE PERMITTED.
8. UNLESS NOTED OTHERWISE, MASONRY WALLS SHALL BE REINFORCED WITH #4 VERTS. AND HORIZ. @ 16" O.C. BAR SPLICES SHALL BE STAGGERED.

6.0 STRUCTURAL STEEL

1. STRUCTURAL STEEL AND MISCELLANEOUS IRON SHALL CONFORM TO ASTM A-36. W SECTIONS SHALL CONFORM TO ASTM A992, GRADE 50.
2. STEEL PIPE COLUMNS SHALL CONFORM TO ASTM A-53, TYPE E OR S, GRADE B.
3. STEEL TUBE SECTIONS SHALL CONFORM TO ASTM A500, GRADE B.
4. STEEL PLATES SHALL CONFORM TO ASTM A-36, Fy = 36 ksi MIN.
5. ALL DETAILING SHALL CONFORM TO CURRENT AISC SPECIFICATIONS.
6. ALL WELDING SHALL CONFORM TO CURRENT AISC AND AWS 1.1 SPECIFICATIONS, AND SHALL PERFORMED BY CERTIFIED WELDERS APPROVED BY THE LOCAL BUILDING AUTHORITY. ALL SHOP WELDING SHALL BE IN AN APPROVED FABRICATORS SHOP AUTHORIZED BY THE BUILDING AUTHORITY OR SPECIFIC INSPECTION PER IBC.
7. ALL COMPLETE JOINT PENETRATION WELDS REQUIRE SPECIAL INSPECTION AND UT TESTING.
8. ALL WELDING ELECTRODES SHALL BE E70XX OR SHIELDED WIRES WITH FY GREATER THAN OR EQUAL TO 70 KSI.
9. BOLTS, NUTS, AND SCREWS SHALL CONFORM TO ASTM A307 GRADE "A".
10. HIGH STRENGTH BOLTS SHALL BE ASTM A325. CONTACT FACES OF STEEL CONNECTIONS WHERE HIGH STRENGTH BOLTS ARE TO BE USED SHALL NOT BE PAINTED.
11. ALL FOUNDATION BOLTS SHALL BE ASTM A-36 GALVANIZED ALL THREAD OR ASTM A307 UNFINISHED BOLTS. ALL SILL BOLTS IN SEISMIC ZONE 4 SHALL BE FIVE-EIGHTHS INCHES IN DIAMETER. BOLT HOLES TO BE ONE-THIRTY-SECONDS OF AN INCH TO ONE-SIXTEENTH OF AN INCH LARGER THAN SPECIFIED BOLT.
12. ALL STRUCTURAL STEEL AND MISCELLANEOUS IRON NOT ENCASED IN CONCRETE SHALL RECEIVE ONE SHOP COAT OF APPROVED PRIMER PAINT.
13. ALL STEEL EXPOSED TO WEATHER SHALL BE HOT-DIP GALVANIZED AFTER FABRICATION OR OTHER APPROVED WEATHER PROOFING METHOD HAVING EQUIVALENT RESULTS MAY BE USED.
14. WHERE NECESSARY, PROVIDE ONE-HALF INCH DIAMETER X THREE INCH NELSON STUDS AT 36" O.C.
15. ALL GROUT UNDER STEEL BEARING PLATES SHALL BE SOLID DRYPACK OR NON-SHRINK GROUT PLACED AS DIRECTED BY THE MANUFACTURER.
16. PROVIDE WELDER'S CERTIFICATE FOR ALL SINGLE-PASS FILLET WELDS NOT EXCEEDING 5/16" IN SIZE, OR PROVIDE THE CERTIFICATE OF COMPLIANCE THAT THE WORK WAS PERFORMED IN AN APPROVED FABRICATOR'S SHOP.

7.0 WOOD FRAMING NOTES

1. ALL LUMBER FRAMING AND BEARING STUDS TO BE DOUGLAS FIR-LARCH WITH MOISTURE CONTENT LESS THAN 19%.
   - 1.1. 4x AND SMALLER FRAMING TO BE DF #2.
   - 1.2. 6x AND LARGER FRAMING TO BE DF #1.
   - 1.3. GLUE LAMINATED TIMBER BEAMS TO BE APA/EWS MARKED 24F-V4. GLU-LAMS EXPOSED TO WEATHER SHALL BE RATED FOR EXTERIOR USE BY THE MANUFACTURER OR AN APPROVED PROTECTION FROM EXPOSURE SHALL BE PROVIDED.
   - 1.4. LAMINATED VENEER LUMBER (LVL) TO BE 2.0E, Fb=2600 PSI. Fv= 285 PSI EQUIVALENT OR BETTER FOR MEMBERS LESS THAN 10" DEEP, CONNECT PLIES WITH (2) ROWS 16D BOX NAILS AT 12" O.C. FOR MEMBERS GREATER THAN 10" DEEP, CONNECT PLIES WITH (3) ROWS 16d BOX NAILS AT 12"O.C. FOR THREE PIECE MEMBER, NAILING SPECIFIED IS FROM EACH SIDE.
   - 1.5. PARALLEL STRAND LUMBER (PSL) TO BE 2.2E, Fb= 2900 PSI Fv= 290 PSI EQUIVALENT OR BETTER.
   - 1.6. INTERIOR NON-BEARING STUDS AND PLATES MAY BE #2 GRADE OR BETTER.
2. APA RATED SHEATHING SHALL BE MANUFACTURED WITH EXTERIOR GLUE IN ACCORDANCE WITH THE REQUIREMENTS OF THE IBC AND PS 1-1, PS-2, OR APA PRP-108. SHEAR PLYWOOD SHALL BE C-D, C-C, 303 (T1-11), OR AN APPROVED EQUAL.
3. ALL RESAWN AND ROUGH SAWN BEAMS ARE TO BE FREE OF HEART CENTER.
4. ALL FRAMING CLIPS AND DEVICES SHALL BE "SIMPSON TIE" OR ICC APPROVED EQUAL.
5. MINIMUM NAILING FOR CONNECTION NOT INDICATED ON THE DRAWINGS SHALL BE IN ACCORDANCE WITH IBC .
6. ALL MULTIPLE TRIMMERS, MULTIPLE STUDS, OR POSTS SHALL BE STACKED IN ALL WALL FRAMING CONNECTED WITH POSITIVE CONNECTIONS. SOLID BLOCKING SIMILAR IN SIZE TO FRAMING ABOVE SHALL BE PROVIDED AT ALL FLOORS ALL THE WAY DOWN TO THE FOUNDATION.
7. DO NOT NOTCH BEAMS, JOISTS, OR STUDS.
8. ALL NAILS SHALL BE "COMMON" WIRE NAILS AND SHALL CONFORM TO THE FOLLOWING:

SIZE	SHANK DIA.	LENGTH	EQUIVALENT STAPLE SIZES
8d	0.131"	2 1/2"	13 GA x 1-3/4"
10d	0.148"	3"	12 GA x 1-3/4"
16d	0.162"	3 1/2"	N / A

   - 8.1. NO SUBSTITUTIONS UNLESS APPROVED IN WRITING BY RW ENGINEERING OR SPECIFICALLY ADDRESSED IN THESE CALCULATIONS OR THE PLANS. ALL NAILS EXPOSED TO WEATHER SHALL BE GALVANIZED.
   - 8.2. REFER TO SIMPSON SPECIFICATIONS FOR FRAMING HARDWARE ATTACHMENT REQUIREMENTS. ALL NAILS SHALL MEET THE REQUIREMENTS OF ASTM F 1667.
9. SHEATH AND NAIL ALL SHEAR PANELS AND GABLE END TRUSSES THE SAME AS THE SHEAR WALL ABOVE OR BELOW.
10. CONNECT DOUBLE STUDS, DOUBLE JOISTS, OR ANY OTHER MULTIPLE PIECE MEMBER W/ MIN. (2) ROWS 16d BOX NAILS @ 12" O.C.
11. TYPICAL LOAD BEARING AND EXTERIOR STUDWALL CONSTRUCTION:
   - 11.1. STUD HEIGHT ≤ 10'-0" - 2x4 @ 16" O.C.
   - 11.2. STUD HEIGHT ≤ 14'-0" - 2x6 @ 16" O.C.
   - 11.3. STUD HEIGHT ≤ 18'-0" - 1-3/4" x 5-1/2" L.V.L. @ 12" O.C.
   - 11.4. STUD HEIGHT ≤ 22'-0" - 1-3/4" x 7-1/4" L.V.L. @ 12" O.C.
   - 11.5. STUD HEIGHT ≤ 27'-0" - 1-3/4" x 9-1/4" L.V.L. @ 12" O.C.
12. USE (2) CONT. KING STUDS E.S. OF OPENINGS WHERE STUD HEIGHT EXCEEDS 10'-6" U.N.O. DO NOT BREAK CONT. KING STUDS BY SPANNING HEADER OVER MULTIPLE OPENINGS. ALWAYS RAKE/BALLOON FRAME STUDWALLS.
13. PORTIONS OF STRUCTURAL GLU-LAM BEAMS, WHICH ARE EXPOSED TO WEATHER, SHALL BE PRESSURE TREATED OR WOOD OF NATURAL RESISTANCE TO DECAY. EQUIVALENT PROTECTION MAY BE PROVIDED WITH TWO COATS MINIMUM OF SEALER.

8.0 ROOF FRAMING NOTES

1. ROOF LOADS: SNOW = 23 PSF : DEAD = 20 PSF OR 15 PSF (SEE PLAN)
2. USE (1)-LAYER 5/8" (40/20) CDX APA RATED ROOF SHEATHING OR OSB EQUIVALENT, APPLY FACE GRAIN/LONG DIMENSION PERPENDICULAR TO SUPPORT FRAMING. STAGGER PANELS AND NAIL WITH 10d'S AT 6" O.C. EDGES AND BOUNDARIES AND 10d'S AT 12" O.C. FIELD. NAIL ALL DRAG MEMBERS, SHEAR PANELS, BLOCKING, E.T.C. w/ NAILS SPACED AT 4" O.C. SEE DETAIL FOR ADDITIONAL NAILING REQUIREMENTS.
3. USE (2) TRIMMERS AND (1) KING STUD UNDER ALL OPENINGS 6'-0" OR GREATER.
4. CONNECT TRUSS BLOCKING AND GABLE END TRUSSES TO TOP PLATE OR BEAM BELOW WITH A35's, LTP4's, L70's, OR LS50's @ 48" O.C. UNLESS NOTED OTHERWISE.
5. DOUBLE TOP PLATE LAP SPLICES SHALL BE 4'-0" MINIMUM AND FACE NAILED WITH (12)-16d NAILS.
6. THE FOLLOWING COLUMN/POST CAPS ARE INTERCHANGEABLE: CC, ECC, CCQ, & ECCQ.
7. WHERE HEADERS ARE PLACED HIGH IN THE WALL AND BREAK THE DOUBLE TOP PLATE, AN MSTC28 SHALL CONNECT THE HEADER TO THE TOP PLATE AT EACH END.
8. ENCLOSED ATTIC AND RAFTER SPACES SHALL HAVE CROSS VENTILATION BY OPENINGS EQUAL TO 1/150TH OF THE AREA. WHERE EAVE OR CORNICE VENTS ARE INSTALLED, INSULATION SHALL NOT BLOCK THE FREE FLOW OF AIR. A MINIMUM OF 1" OF AIR SPACE SHALL BE PROVIDED BETWEEN THE INSULATION AND ROOF SHEATHING. ROOFS WITH RAFTERS, BAYS AND/OR VAULTED CEILINGS MUST BE VENTILATED TO OUTSIDE AT RIDGE.

9.0 PRE-MANUFACTURED WOOF TRUSSES

1. TRUSS MANUFACTURER SHALL BE RESPONSIBLE FOR ALL ENGINEERING, LAYOUT DRAWINGS, CONNECTIONS, BLOCKING, BRACING, AND TRUSS ERECTION INFORMATION. THE CONTRACTOR SHALL BE RESPONSIBLE FOR PROPER COORDINATION BETWEEN ENGINEER/ARCHITECT DRAWINGS, TRUSS MANUFACTURER INFORMATION, ANY REQUIRED FIELD CHANGES, PROPER INSTALLATION OF FINAL PRODUCT AND ITS CONFORMANCE TO THE ARCHITECT'S DESIGN. THE ARCHITECT AND ENGINEER ASSUME NO LIABILITY FOR SAID PRODUCT.
2. TRUSS MANUFACTURER TO VERIFY LOCATION OF AND PROVIDE REINFORCED TRUSSES FOR THE SUPPORT OF ANY MECHANICAL EQUIPMENT WHERE OCCURRING.
3. TRUSS MANUFACTURER TO VERIFY LOCATION OF AND DESIGN FOR ALL CEILING HEIGHT CHANGES, ATTIC ACCESSES, RETURN AIR GRILLS, ETC. TRUSS MANUFACTURER TO COORDINATE ANY FINDINGS TO BOTH RW ENGINEERING AND THE ARCHITECT.
4. DEAD LOAD DEFLECTIONS SHALL BE LIMITED TO L/240.
5. GABLE END TRUSSES SHALL BE STRUCTURAL, DESIGNED TO SUPPORT OVERHANG AND TO ALLOW A TOP CHORD NOTCH OF ONE AND A HALF INCHES.
6. ALL NON-BEARING WALLS ARE TO HAVE A ONE-FOURTH OF AN INCH GAP TO THE BOTTOM CHORD OF THE TRUSSES. SECURE BOTTOM CHORD TO WALL BELOW WITH SIMPSON STC CLIPS.
7. USE PRE-ENGINEERED MANUFACTURED TRUSSES @ 24" O.C. SOLID BLOCK @ ALL SUPPORTS AND PER MANUFACTURER'S SPECIFICATIONS. USE SIMPSON H1 @ EACH SUPPORT WALL/BEAM TO EACH TRUSS AND H6 @ EACH SUPPORT WALL/BEAM TO EACH GIRDER TRUSS.
8. HANG TRUSSES AND GIRDER TRUSSES W/ SIMPSON HUS26 OR AS SPECIFIED ON PLAN. TRUSS CALCULATIONS HOLD PRECEDENCE OVER PLAN AT ALL TRUSS TO TRUSS CONNECTIONS.
9. TRUSSES ARE TO BE HANDLED, INSTALLED, AND BRACED IN ACCORDANCE WITH HIB-91 OF THE TRUSS PLATE INSTITUTE (TPI).

10.0 FOUNDATION/FLOOR FRAMING

1. ALL EXTERIOR WALLS SHALL BE CONSIDERED SHEARWALLS NAILED AS TYPE "6" WALLS (SEE SHEARWALL SCHEDULE).
2. FLOOR SHEATHING SHALL BE T.&G. APA RATED STURD-I-FLOOR. APPLY FACE GRAIN/LONG DIMENSION PERPENDICULAR TO SUPPORT FRAMING. STAGGER PANELS AND NAIL WITH 10d AT 6" O.C. AT ALL EDGES AND BOUNDARIES (BLOCKING AT INTERIOR SHEAR WALLS, DRAG MEMBERS, ETC.), AND 10d AT 10" O.C. FIELD. GLUE AND NAIL THROUGHOUT.
3. FLOOR JOISTS SHALL BE BLOCKED SOLID @ ALL SUPPORT LINES (CONNECT BLOCKING TO WALL/BEAM BELOW WITH A35's @ TWICE THE JOIST SPACING), BENEATH ALL INTERIOR-BEARING WALLS, AND UNDER ALL HOLDOWNS. USE DOUBLE JOISTS BELOW ALL PARALLEL INTERIOR-BEARING WALLS. PROVIDE L.S.L. RIM BOARD THROUGHOUT. PROVIDE CRUSH BLOCKS, WEB STIFFENERS, ETC. PER MANUFACTURER'S SPECIFICATIONS.
4. ALL FLOOR OPENINGS SHALL BE BETWEEN JOISTS.
5. ALL HOLDOWNS SHALL BE INSTALLED AT THE TIME APPROPRIATE MEMBERS ARE FRAMED AND ACCORDING TO MANUFACTURER'S SPECIFICATIONS. IF STRUCTURE IS MULTIPLE STORIES, AS MUCH AS POSSIBLE, LINE FLOOR-TO-FLOOR HOLDOWNS UP WITH FLOOR-TO-FOUNDATION HOLDOWNS SO THAT HOLDOWNS ARE ATTACHED TO COMMON MEMBERS. USE SHEAR PLY NAILING TO ALL HOLDOWN MEMBERS.
6. PROVIDE FULL BEARING, FULL DEPTH BLOCKING UP TO FLOOR TO SUPPORT POSTS, DOUBLE STUDS, OR DOUBLE TRIMMERS ABOVE.
   - 6.1. WHERE COLUMN BASE OR POST BASE IS CALLED OUT ON A PIER BENEATH THE SUBFLOOR, PROVIDE POST UP TO SUBFLOOR TO SUPPORT IDENTICAL POST ABOVE. USE (2) SIMPSON ST6224 ON OPPOSITE SIDES OF POST TO STRAP POST ABOVE THROUGH THE FLOOR TO THE POST BELOW.
7. ANCHOR BOLTS:
   - 7.1. FOR 2x SILL PLATE, USE 5/8" DIAM. x 10" A.B.
   - 7.2. FOR 3x OR DOUBLE SILL PLATE, USE 5/8" DIAM. x 12" A.B. EXTEND SILL BOLTS 7" INTO FOUNDATION MINIMUM, MAXIMUM SPACING SHALL BE 4'-0" O.C. WITH MINIMUM (2) BOLTS IN EACH SILL BOARD. BOLTS SHALL BE LOCATED NOT MORE THAN (12) NOR LESS THAN (7) BOLT DIAMETERS FROM EACH END OF SILL PIECE. MINIMUM 3"x3"x |" THICK PLATE WASHERS SHALL BE INSTALLED ON EACH SILL BOLT. SPACE WASHER 1/2" FROM SHEATING OR RIM.
   - 7.3. SILL PLATES: USE FOUNDATION GRADE REDWOOD OR TIMBERSTRAND L.S.L. TREATED WITH ZINC BORATE OR PRESSURE TREATED MUDSILL. SEE SHEARWALL SCHEDULE FOR IMPORTANT INFORMATION REGARDING SILL PLATES. FOR ALL SILL PLATES NOT NOTED, USE 2"x WALL WIDTH WOOD SILL. ALL SHEAR WALLS, EXCEPT TYPE "6" AND "4", REQUIRE FOUNDATION SILL PLATES AND ALL FRAMING MEMBERS RECEIVING EDGE NAILING FROM ABUTTING PANELS TO BE NOT LESS THAN A SINGLE 3" NOMINAL MEMBER. PLYWOOD JOINT AND SILL PLATE NAILING SHALL BE STAGGERED IN ALL CASES.
8. AN 8" WIDE CONCRETE FOUNDATION WALL SHALL BE CENTERED ON CONTINUOUS FOOTING BELOW W/ (1) #4 CONTINUOUS @ TOP & BTM. OF WALL & #4 VERTICALS @ 24" O.C. MAX HOOKED AT FOOTING (ALTERNATE HOOKS).
9. CONTINUOUS CONCRETE FOOTINGS TO BE 16"x10" W/ (2) #4's CONT. STEP FOOTING AS REQUIRED TO BEAR ON NATIVE GRADE OR AS DIRECTED BY SOILS ENGINEER. EXTEND EXTERIOR FOOTING DEPTHS TO FROST LINE (2'-0" U.N.O.).
10. THE FOLLOWING COLUMN/POST BASES ARE INTERCHANGEABLE: CB & CBQ OR CBS & CBSQ.
11. ALL SLABS TO BE 4" THICK CONCRETE W/ #3 BARS @ 18" O.C. E.W. OR 6x6 10/10 WELDED WIRE FABRIC REINFORCING AND PLACED OVER 4" TYPE-II BASE COMPACTED TO 90% RELATIVE DENSITY ON UNDISTURBED NATIVE SOIL U.N.O
12. REFERENCE HOLDOWN SCHEDULE FOR IMPORTANT INFORMATION PERTAINING TO FOOTINGS.
13. STAIRWAYS SHALL NOT BE LESS THAN 36" IN WIDTH. EVERY STAIRWAY SHALL HAVE MINIMUM 6'-8" HEADROOM. THE MAXIMUM VERTICAL HEIGHT ALLOWED BETWEEN LANDINGS IS 12'-0". THE RISE OF STEPS IN THE STAIRWAY SHALL NOT EXCEED 8", AND THE TREAD SHALL BE NOT LESS THAN 9".
14. STAIR HANDRAILS SHALL BE PLACED NOT LESS THAN 34" NOR MORE THAN 38" ABOVE LANDINGS AND THE NOSING OF THE TREADS. THEY SHALL BE CONTINUOUS FOR THE FULL LENGTH OF THE STAIRS AND THE ENDS SHALL BE RETURNED. IN RESIDENTIAL OCCUPANCIES HANDRAILS MAY HAVE STARTING NEWELS WITHIN THE FIRST TREAD. HANDGRIP PORTION OF HANDRAILS SHALL BE NOT LESS THAN 1 |" NOR MORE THAN 2" IN CROSS-SECTIONAL DIMENSION AND HAVE A SMOOTH GRIPPING SURFACE. A SPACE OF NOT LESS THAN 1\" SHALL BE PROVIDED BETWEEN THE WALL AND THE RAIL.
15. GUARDRAILS SHALL BE A MINIMUM OF 42" HIGH, U.N.O. NO OPENINGS OVER 4", TRIANGULAR OPENINGS FORMED BY THE RISER, TREAD AND BOTTOM RAIL OF A GUARD AT THE OPEN SIDE OF A STAIRWAY ARE PERMITTED TO BE OF SUCH SIZE THAT A SPHERE 6" IN DIAMETER CANNOT PASS THROUGH.
16. FIRE BLOCKING BETWEEN CHIMNEYS AND COMBUSTIBLE CONSTRUCTION SHALL BE INSTALLED AT 10'-0" INTERVALS, BOTH VERTICAL AND HORIZONTAL.
17. INSTALL ADHERED VENEER IN COMPLIANCE WITH LOCAL CODES. FOUNDATION SUPPORT REQUIRED FOR EXTERIOR ROCK VENEER. ANCHOR TIES SHALL BE PROVIDED TO HORIZONTAL JOINT REINFORCEMENT WIRE OF NO. 9 GAUGE OR EQUIVALENT.
18. EXTERIOR STUCCO WALLS SHALL HAVE A WEEP SCREED AT OR BELOW THE FOUNDATION PLATE LINE AND 4" ABOVE GRADE OR 2" ABOVE PAVED AREAS THAT WILL ALLOW TRAPPED WATER TO DRAIN TO THE EXTERIOR OF THE BUILDING. THE WEATHER-RESISTIVE BARRIER SHALL LAP THE ATTACHMENT FLANGE, AND THE EXTERIOR LATH SHALL COVER AND TERMINATE ON THE ATTACHMENT FLANGE OF THE SCREED.
19. COLUMNS OR POSTS LOCATED ON CONCRETE OR MASONRY FLOORS AND THAT SUPPORT PERMANENT STRUCTURES SHALL BE SUPPORTED BY CONCRETE PIERS OR METAL PEDESTALS PROJECTING ABOVE EXPOSED EARTH A MINIMUM OF 6" AND AT LEAST 1" ABOVE SUCH FLOORS UNLESS TREATED WOOD IS USED. INDIVIDUAL CONCRETE OR MASONRY PIERS SHALL PROJECT AT LEAST 8" ABOVE EXPOSED GROUND UNLESS THE COLUMNS OR POSTS THAT THEY SUPPORT ARE OF WOOD RESISTANT TO DECAY.
20. MINIMUM CLEARANCE FROM GROUND UNDER GIRDERS SHALL BE 12 INCHES; UNDER JOISTS SHALL BE 18 INCHES.
21. UNDERFLOOR VENTS SHALL EQUAL 1 SQUARE FOOT FOR EACH 150 SQUARE FEET OF UNDERFLOOR AREA, AND MUST PROVIDE CROSS VENTILATION.

Beam Equivalent Table

DF No. 1 BEAM	EQUIVALENT BEAM
6x8	6x8 DF No. 1 RMT / (2) 1-3/4x9-1/2 LVL 1.9E 5-1/4x9-1/2 PSL 2.0E / 5-1/8x7-1/2 GLB 24F-V4
6x10	6x10 DF No. 1 RMT / (2) 1-3/4x11-7/8 LVL 1.9E 5-1/4x9-1/2 PSL 2.0E / 5-1/8x10-1/2 GLB 24F-V4
6x12	6x12 DF No. 1 RMT / (2) 1-3/4x14 LVL 1.9E 5-1/4x11-7/8 PSL 2.0E / 5-1/8x12 GLB 24F-V4
6x14	6x14 DF No. 1 RMT / (2) 1-3/4x16 LVL 1.9E 5-1/4x14 PSL 2.0E / 5-1/8x13-1/2 GLB 24F-V4

Beam Equivalent Table

DF No. 2 BEAM	EQUIVALENT BEAM
4x6	4x6 DF No. 2 RMT / (2) 1-3/4x5-1/2 LVL 1.9E 3-1/2x9-1/2 PSL 2.0E / 3-1/8x6 GLB 24F-V4
4x8	4x8 DF No. 2 RMT / (2) 1-3/4x7-1/4 LVL 1.9E 3-1/2x9-1/2 PSL 2.0E / 3-1/8x7-1/2 GLB 24F-V4
4x10	4x10 DF No. 2 RMT / (2) 1-3/4x9-1/2 LVL 1.9E 3-1/2x9-1/2 PSL 2.0E / 3-1/8x10-1/2 GLB 24F-V4
4x12	4x12 DF No. 2 RMT / (2) 1-3/4x11-7/8 LVL 1.9E 3-1/2x11-7/8 PSL 2.0E / 3-1/8x12 GLB 24F-V4

Continuous Footing Schedule

[12] ← DENOTES FOOTING SIZE

SYMBOL	WIDTH (NA TO MONOPOUR)	DEPTH (MIN)	STEEL (CONTINUOUS)
12	12"	10"	(2) #4
16	16"	10"	(2) #4's
18	18"	10"	(2) #4's
21	21"	10"	(2) #4's
24	24"	10"	(3) #4's
28	28"	10"	(3) #4's
32	32"	10"	(3) #4's
36	36"	10"	(4) #4's

Pier Footing Schedule

⟨12⟩ ← DENOTES FOOTING SIZE

SYMBOL	WIDTH (EACH SIDE)	DEPTH	STEEL (EACH WAY)
12	12"	10"	(2) #4's
14	14"	10"	(2) #4's
16	16"	10"	(2) #4's
18	18"	10"	(3) #4's
21	21"	10"	(3) #4's
24	24"	10"	(3) #4's
28	28"	12"	(3) #4's
32	32"	12"	(4) #4's
36	36"	12"	(5) #4's
42	42"	12"	(6) #4's
48	48"	14"	(7) #4's
54	54"	14"	(8) #4's
60	60"	14"	(9) #4's

Abbreviations

ALTERNATE	ALT
ANCHOR BOLT	AB
APPROXIMATE	APPROX
AT	@
ALL THREAD ROD	ATR
BEAM	BM
BEARING	BRG
BETWEEN	BET
BLOCK	BLK
BOTH SIDES	BS(B/S)
BOTTOM	BOT
CANTILEVER	CANT
CENTERLINE	C.L.
CONCRETE	CONC
CONCRETE MASONRY UNIT	CMU
CONTINUOUS	CONT
CONTROL JOINT	CJ
COUNTERSINK	CS
DEAD LOAD	DL
DETAIL	DET
DIAMETER	DIAM
DIMENSION	DIM
DOUBLE	DBL
DOUGLAS FIR	DF
DRAG TRUSS	DT
DRAWING	DWG
EACH	EA
EACH END	EE
EACH FACE	EF
EACH SIDE	ES
EACH WAY	EW
EDGE NAIL	EN
ELEVATION	ELEV
EMBEDMENT	EMBED
EQUAL	EQ
EXISTING	(E)
EXTERIOR	EXT
FINISH	FIN
FLOOR	FLR
FOOTING	FTG
FIELD NAIL	FN
FOUNDATION	FDN
GAGE	GA
GALVANIZED	GALV
GLUED-LAMINATED BEAM	GLB
HEADER	HDR
HEIGHT	HT
HEM-FIR	HF
HORIZONTAL	HORIZ
INFORMATION	INFO
INTERIOR	INT
JOIST	JST
KING STUD	KS
KING STUD EACH SIDE	KSES
LAMINATED VENEER LUMBER	LVL
LIGHT	LT
LIVE LOAD	LL
MACHINE BOLT	MB
MANUFACTURER	MFR
MAXIMUM	MAX
MECHANICAL	MECH
MINIMUM	MIN
MISCELLANEOUS	MISC
NEW	(N)
NOT TO SCALE	NTS
ON CENTER	O.C.
ON OR OVER	O/
PENETRATION	PEN
PLATE	PLT
PLYWOOD	PLY
POUND PER SQUARE FOOT	PSF
POUND PER SQUARE INCH	PSI
POWDER DRIVEN FASTENER	PDF
PRESERVATIVE TREATED	PT
REDWOOD	RWD
REFERENCE	REF
REQUIRED	REQ'D
SCHEDULE	SCHED
SEE ARCHITECTURAL DRAWINGS	SAD
SHEAR WALL	SW
SIMILAR	SIM
SPECIFICATION	SPEC
SQUARE	SQ
STANDARD	STD
STEEL	STL
THREADED	THD
TONGUE & GROOVE	T&G
TOP & BOTTOM	T&B
TOP PLATE	TP
TRIMMERS	TRIMM
TUBE STEEL	TS
TYPICAL	TYP
UNLESS NOTED OTHERWISE	UNO
VERTICAL	VERT
WELDED WIRE MESH	WWM
WITH	W/

Design Parameters / Criteria

CODE:	2018 IBC AND LOCAL DESIGN CRITERIA
PROJECT ELEVATION:	< 5000'
SITE CLASS:	D
WIND SPEED:	120 MPH (3 SECOND GUST)
WIND EXPOSURE:	C

DESIGN INCLUDES SNOW LOAD FOR DRIFT AND UNBALANCED LOADING.

1. LOADING:
   - 1.1. FLOOR LOADS: ALL: LIVE = 40 PSF : DEAD = 15 PSF (UPPER) 10 PSF (LOWER)
     ROOF LOADS: GUEST HOUSE: SNOW = 23 PSF : DEAD = 20 PSF; COVERED PATIO: SNOW = 23 PSF : DEAD = 15 PSF
2. EARTHQUAKE DESIGN DATA:
   - 2.1. Ss = 1.45, S1 = 0.47, SDS = 1.16, SD1 = 0.54
   - 2.2. SEISMIC DESIGN CATEGORY: D
   - 2.3. BASE SHEAR V = Cs*W = (I*Rho*F*SDS/1.4*R)*W
     R = 6.5 (LIGHT FRAMED WOOD WALLS SHEATHED WITH WOOD STRUCTURAL PANELS RATED FOR SHEAR RESISTANCE).

Shearwall Schedule

Shearwall Symbol	Sheathing Thickness	Nail Size	Shear Nail Spacing E.N.	Shear Nail Spacing F.N.	16d Nail Spacing	1/4" SDS Spacing	3x Framing at Adj. Panel Edges	***5/8" A.B. Spacing	***1/2" A.B. Spacing	**MASA SPACING
6	3/8"	8d	6" O.C.	12" O.C.	6" O.C.	16" O.C.	No	48" O.C.	48" O.C.	48" O.C.
4	3/8"	8d	4" O.C.	12" O.C.	4" O.C.	12" O.C.	No	48" O.C.	35" O.C.	48" O.C.
3	3/8"	8d	3" O.C.	12" O.C.	3" O.C.	8" O.C.	Yes	46" O.C.	30" O.C.	38" O.C.
2	3/8"	8d	2" O.C.	12" O.C.	2" O.C.	6" O.C.	Yes	35" O.C.	23" O.C.	29" O.C.
4/2	3/8" B/S	10d	4" O.C.	12" O.C.	2" O.C.	5-1/2" O.C.	Yes	32" O.C.	21" O.C.	26" O.C.
3/2	3/8" B/S	8d	3" O.C.	12" O.C.	N/A	4" O.C.	Yes	23" O.C.	15" O.C.	19" O.C.
2/2	3/8" B/S	8d	2" O.C.	12" O.C.	N/A	3" O.C.	Yes	18" O.C.	11" O.C.	14" O.C.
A	1/2"	10d	2" O.C.	12" O.C.	N/A	6" O.C.	Yes	29" O.C.	19" O.C.	24" O.C.
B	5/8"	10d	2" O.C.	12" O.C.	N/A	5-1/2" O.C.	Yes	26" O.C.	16" O.C.	21" O.C.
L6	7/16" Smart Panel Siding	8d	6" O.C.	12" O.C.	6" O.C.	16" O.C.	No	48" O.C.	48" O.C.	48" O.C.
L4	7/16" Smart Panel Siding	8d	4" O.C.	12" O.C.	4" O.C.	16" O.C.	No	48" O.C.	39" O.C.	48" O.C.
L3	7/16" Smart Panel Siding	8d	3" O.C.	12" O.C.	3" O.C.	12" O.C.	Yes	48" O.C.	36" O.C.	45" O.C.
L2	7/16" Smart Panel Siding	8d	2" O.C.	12" O.C.	2" O.C.	8" O.C.	Yes*	42" O.C.	27" O.C.	35" O.C.

1. USE APA RATED SHEAR PLYWOOD / OSB / T1-11 SHEATHING OR AN APPROVED EQUAL U.N.O.
2. NAILS SHALL BE COMMON OR GALVANIZED BOX. NAIL HEADS ARE NOT TO PENETRATE PLYWOOD.
3. ALL FIELD NAILING SHALL BE AT 12" O.C. U.N.O.
4. ALL SHEAR WALL STUDS SHALL BE DOUGLAS FIR LARCH SPACED AT 16" O.C.
5. NAIL ALL SHEAR PLY WITH EDGE NAIL SPACING AT TOP PLATES, MUD SILLS, ALL POSTS, ALL KING STUDS, AND ALL STUDS WITH HOLDOWNS.
6. WHERE APPLICABLE, PLYWOOD JOINT AND SILL PLATE NAILING SHALL BE STAGGERED IN ALL CASES.
7. FOR ALL SHEAR WALLS EXCEPT TYPES 6, 4, L6, L4 USE:
   - 7.1. 3 INCH NOMINAL OR THICKER SILL PLATES WITH 5/8" X 12" AB's AND (2) 20d BOX NAILS FOR STUD END NAILING.
   - 7.2. 3 INCH NOMINAL OR THICKER FRAMING MEMBERS, OR DOUBLE 2x FRAMING MEMBERS STITCHED TOGETHER WITH MINIMUM (2) ROWS OF 16d NAILS @ 12" O.C. AT ALL ADJOINING PANEL EDGES.
8. * FOR SHEAR WALL TYPE 3, L3, & L2, A 2" NOMINAL SILL PLATE MAY BE USED IF ANCHOR BOLTS ARE SPACED AT ½ THE SPECIFIED SPACING.
9. PROVIDE BLOCKING OR SOLID FRAMING AT ALL PANEL EDGES.
10. DOUBLE SHEAR WALLS TO HAVE SHEAR PLY WITH SPECIFIED NAILING BOTH SIDES. PROVIDE 3" NOMINAL OR THICKER FRAMING MEMBERS ON ALL ABUTTING PANEL EDGES. B/S IS BOTH SIDES.
11. USE SIMPSON MSTC48 OR MSTC52 TO STRAP ACROSS BEAMS AT ANY BREAK IN TOP PLATES, U.N.O.
12. FOUNDATION SILL ANCHOR BOLTS SHALL BE 5/8"x10" SPACED AT 48" O.C. ON ALL EXTERIOR WALL U.N.O.
13. USE 3"x3"x¼" THICK STEEL PLATE WASHERS AT ALL WOOD SILL PLATES FOR SHEAR WALLS. SPACE WASHERS 1/2" FROM SHEATHING OR RIM.
14. ** ALL MASA MUDSILL ANCHORS TO BE INSTALLED WITH BOTH LEGS FULLY NAILED INTO SIDE AND TOP OF SILL PLATE.
15. *** 5/8" AND 1/2" TITEN HD ANCHORS WITH 6" MINIMUM CONCRETE EMBEDMENT MAY BE USED AS A RETROFIT SOLUTION TO SUBSTITUTE ABS WITH EQUAL DIAMETER.
16. ALL NOTES ARE TYPICAL U.N.O.

Holdown Schedule

FLOOR TO FLOOR HOLDOWN CONNECTIONS (SEE DETAILS FOR APPLICATIONS)

Symbol	Holdown *(1)	Min. Vertical Wood Thickness *(2)	Additional Comments
H-1	MSTC40	(2) - 2x Studs	N/A
H-2	MSTC52	(2) - 2x Studs	N/A
H-3	MSTC66	(2) - 2x Studs	N/A
H-4	CMST14	(2) - 2x Studs	Strap to be at Least 80" Long
H-5	CMST12	(2) - 2x Studs	Strap to be at Least 102" Long

FLOOR TO FOUNDATION HOLDOWN CONNECTIONS (SEE DETAILS FOR APPLICATIONS)

Foundation Installation Options (10): Threaded Rod w/ Dbl. Nutted BP; Simpson SB *(4); Threaded Rod Retrofit w/ SET-XP Epoxy *(5)

Symbol *(7)	Holdown Options *(1)	Min. Vert Wood Thickness *(2)	Threaded Rod w/ Dbl. Nutted BP	Simpson SB *(4)	Threaded Rod Retrofit w/ SET-XP Epoxy *(5)	CL *(8)	Screws, Bolts, or Nails *(6)
H-10	STHD10 *(9)	(2) - 2x Studs	N/A	N/A	N/A	N/A	(20) 16d
H-10	HTT4	(2) - 2x Studs	5/8" W/ 12" Embed	SB 5/8x24 W/ 18" Embed	5/8" W/ 12" Embed	1-3/8"	(18) 16d
H-10	HDU2-SDS2.5	(2) - 2x Studs	5/8" W/ 14" Embed	SB 5/8x24 W/ 18" Embed	5/8" W/ 12" Embed	1-5/16"	(6) SDS
H-11	STHD14 *(9)	(2) - 2x Studs	N/A	N/A	N/A	N/A	(24) 16d
H-11	HTT5	(2) - 2x Studs	5/8" W/ 14" Embed	SB 5/8x24 W/ 18" Embed	5/8" W/ 12" Embed	1-3/8"	(26) 16d
H-11	HDU4-SDS2.5	(2) - 2x Studs	5/8" W/ 14" Embed	SB 5/8x24 W/ 18" Embed	5/8" W/ 12" Embed	1-5/16"	(10) SDS
H-12	HDU5-SDS2.5	(2) - 2x Studs	5/8" W/ 20" Embed	SB 5/8x24 W/ 18" Embed	5/8" W/ 16" Embed	1-5/16"	(14) SDS
H-12	HD7B	(2) - 2x Studs	7/8" W/ 20" Embed	SB 7/8x24 W/ 18" Embed	7/8" W/ 16" Embed	1-1/4"	(3) 3/4" Bolts
H-13	HDQ8-SDS3	3-1/2"	7/8" W/ 20" Embed *(3)	SB 7/8x24 W/ 18" Embed	N/A	1-1/4"	(20) SDS
H-13	HD9B	3-1/2"	7/8" W/ 20" Embed *(3)	SB 7/8x24 W/ 18" Embed	N/A	1-1/4"	(3) 7/8" Bolts
H-14	HHDQ11	5-1/2"	1" W/ 8" Embed Into Ftg. *(3)	N/A	N/A	1-1/2"	(24) SDS
H-14	HD12	5-1/2"	1" W/ 8" Embed Into Ftg. *(3)	N/A	N/A	2-1/8"	(4) 1" Bolts
H-15	HHDQ14	5-1/2"	1" W/ 8" Embed Into Ftg. *(3)	N/A	N/A	1-1/2"	(30) SDS
H-15	HDU14-SDS2.5	5-1/2"	1" W/ 8" Embed Into Ftg. *(3)	N/A	N/A	1-9/16"	(36) SDS

1. INSTALL ALL HOLDOWNS PER SIMPSON'S SPECIFICATIONS, MAINTAINING REQUIRED EDGE CLEARANCES.
2. DOUBLE STUDS TO BE CONNECTED BY (2) ROWS OF 16d NAILS AT 4" O.C. STAGGERED.
3. USE (1) #4 BAR VERTICAL EACH SIDE OF 7/8" OR GREATER THREADED ROD (TOTAL OF 2) TO CONNECT STEMWALL TO FOOTING.
4. SB EMBEDMENTS ARE FOR SINGLE POUR INSTALLATION ONLY. REFER TO LATEST VERSION OF SIMPSON CATALOG FOR DOUBLE POUR APPLICATIONS.
5. SPECIAL INSPECTION IS REQUIRED AT ALL EPOXY-SET ANCHORS. CONTACT ENGINEER OF RECORD 2-WORKING DAYS IN ADVANCE PRIOR TO INSTALLATION. USE SIMPSON SET-XP EPOXY FOR CONCRETE DRILL & EPOXY APPLICATIONS & SET EPOXY FOR SOLID GROUTED CMU APPLICATIONS.
6. BOLT HOLES SHALL BE A MINIMUM OF 1/32" AND NO MORE THAN 1/16" LARGER THAN THE SPECIFIED BOLT DIAMETER.
7. IT IS ACCEPTABLE TO SUBSTITUTE HOLDOWNS SPECIFIED HIGHER IN THE TABLE WITH HOLDOWNS OCCURING LOWER IN THE TABLE.
8. "CL" IS IS THE DIMENSION TO THE CENTERLINE OF AB HOLE IN HOLDOWN.
9. USE STHDRJ WHEN RIM JOIST IS PRESENT.
10. USE ASTM A307 ALL THREADED RODS TYPICAL.

RW ENGINEERING
575 East Plumb Lane
Suite 101
Reno, NV 89502
(775) 393-9128
RWEngineering.net

Gerutto Residence

(Guest House Remodel)

Project Address:
250 Hirsh Road
Washoe County, NV 89523
APN: 038-242-34

Date	02/18/21
Drawn	RSW
Project #	20-070

PROFESSIONAL ENGINEER - STATE OF NEVADA - RUSSELL S. WALLACE - Exp. 06/30/2022 - CIVIL - No. 22808
02/18/2021
Russell S. Wallace, PE

Revisions:

Structural Notes & Schedules

SD-1

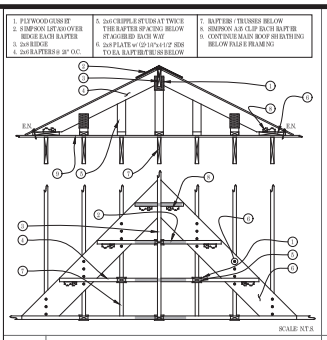

24 Overframing Detail

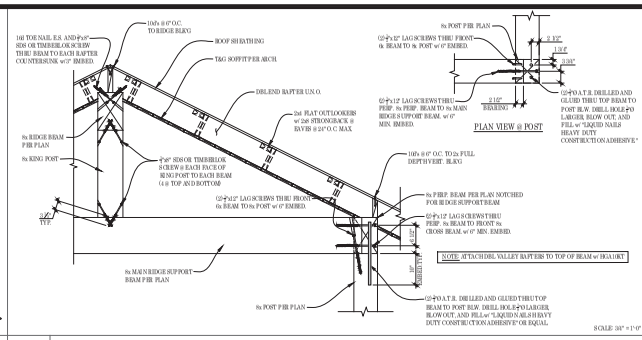

23 Patio Front Beam & Post Connections

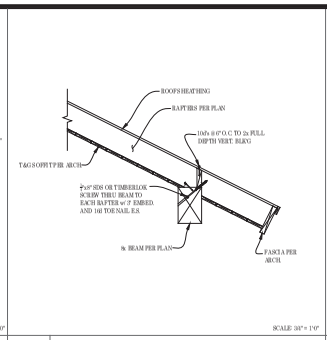

21 Patio Rafter Bearing

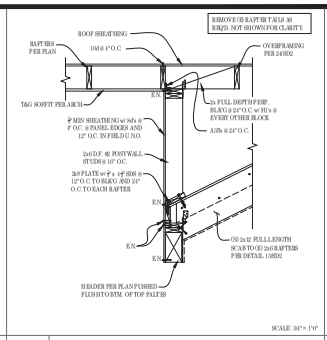

20 New/Existing Roof Connect.

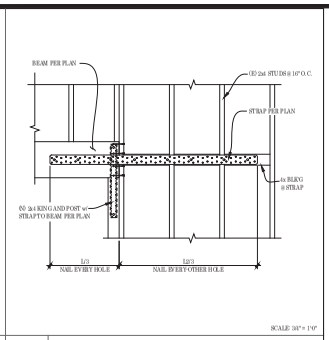

19 Beam to Wall Blk'g

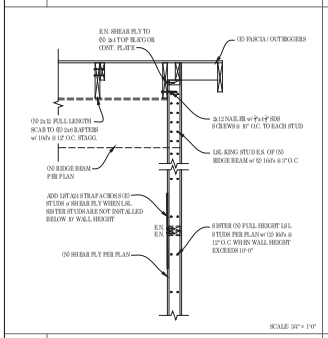

18 Undermined Footing Detail

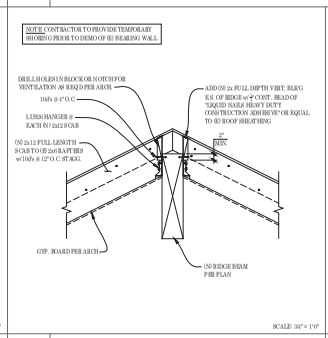

17 (N) Ridge Beam / Rafters

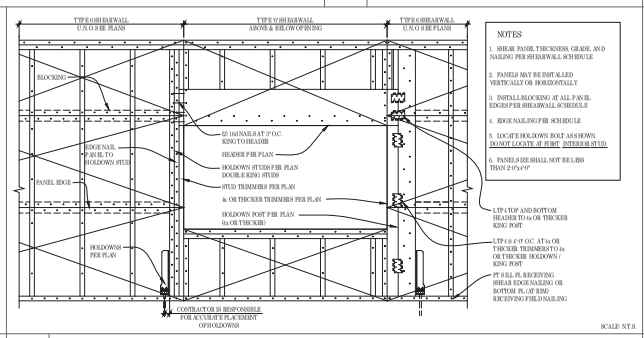

16 Typical Shearwall / Header

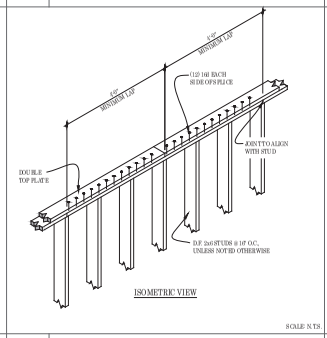

14 Top Plate Splice

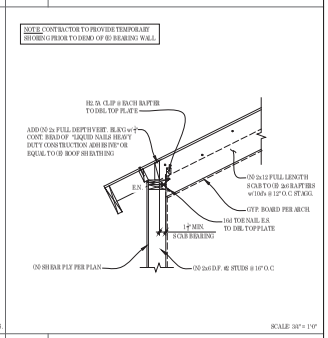

13 Rafter/Scab Bearing & (N) Wall

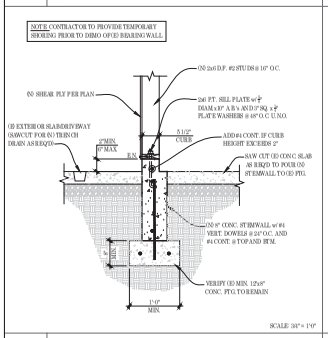

12 New Concrete Stemwall and Curb

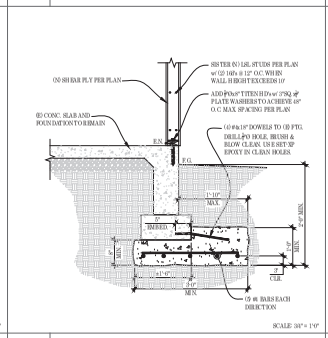

11 Undermined Footing Detail

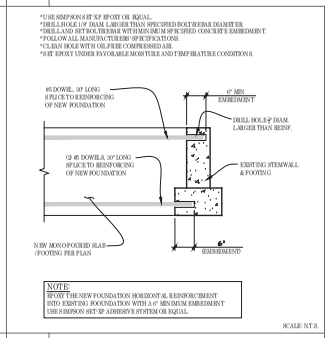

10 Foundation Dowel Detail

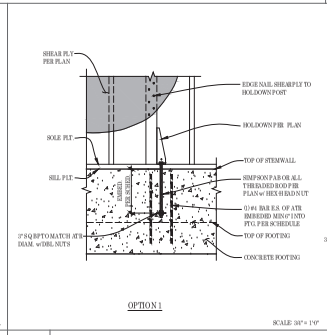

9 Holdown Embedment Detail (No Rim Joist)

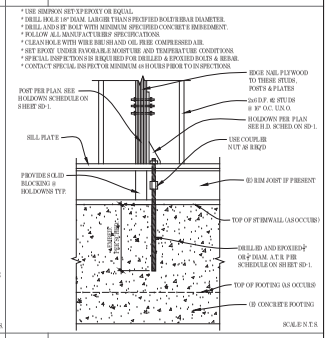

7 Retrofit Holdown Detail

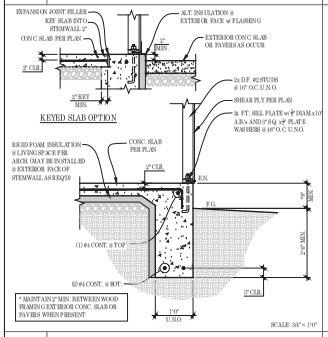

6 Typ. Slab w/ Turndown Ftg.

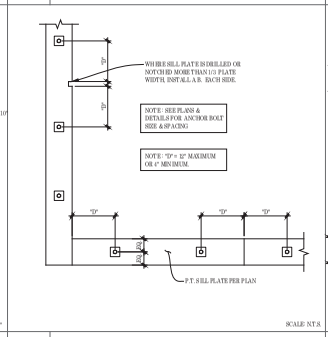

5 Sill Plate Bolting

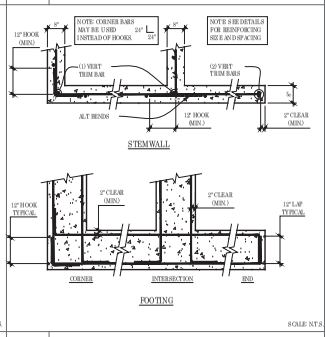

4 Rebar Reinf. Placement

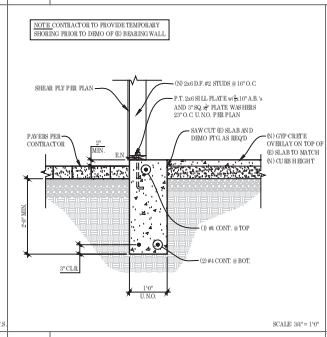

3 (N) Strip Footing Detail

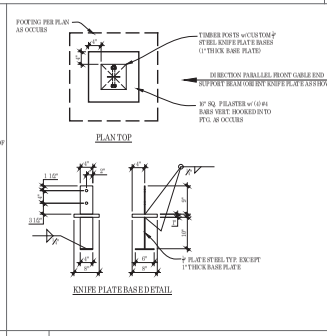

2 Post Knife Plate Base and Footing Detail

RWE
RW ENGINEERING
575 East Plumb Lane
Suite 101
Reno, NV 89502
(775) 393-9128
RWEngineering.net

Gerutto Residence
(Guest House Remodel)

Project Address:
250 Hirsh Road
Washoe County, NV 89523
APN: 038-242-34

Date	02/18/21
Drawn	RSW
Project #	20-070

Russell S. Wallace, PE

Revisions:

Structural Details

SD-2

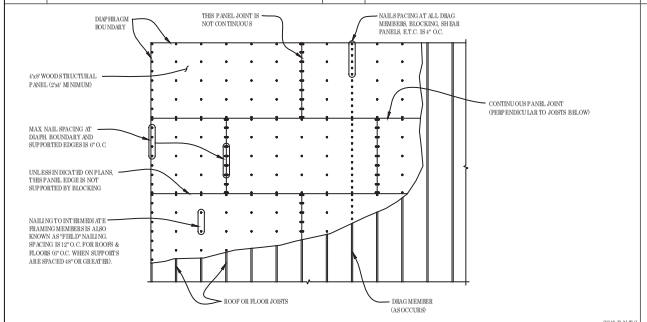

30 Unblocked Diaphragm Nailing

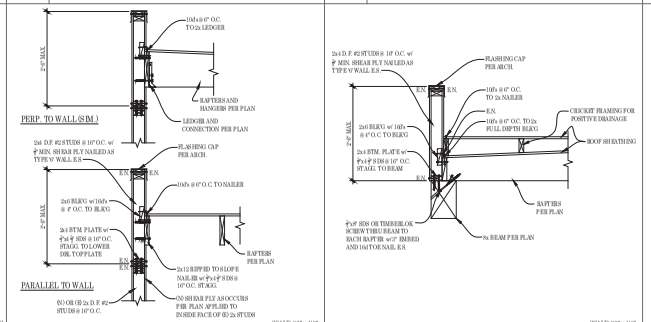

28 Lower Roof @ Wall

27 Lower Roof @ Beam

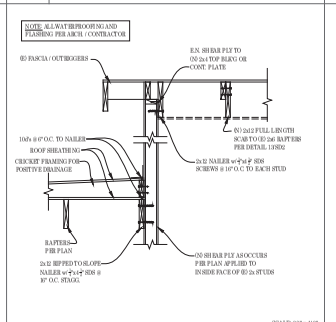

26 Lower Roof Nailer Connection

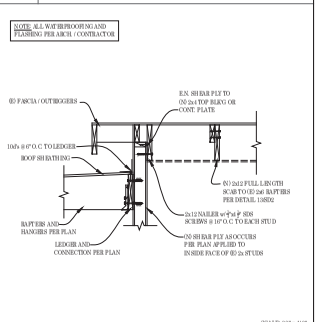

25 Lower Roof Ledger Connection

RWE
RW ENGINEERING
575 East Plumb Lane
Suite 101
Reno, NV 89502
(775) 393-9128
RWEngineering.net

Gerutto Residence
(Guest House Remodel)

Project Address:
250 Hirsh Road
Washoe County, NV 89523
APN: 038-242-34

Date	02/18/21
Drawn	RSW
Project #	20-070

RUSSELL S. WALLACE
Exp. 06/30/2022
CIVIL
02/18/2021
Russell S. Wallace, PE

Revisions:

Structural Details

SD-3